Fieldbus with fiber optics (FO) in line/star topology „C17“ (for FO coupler „d-Light“)

Contents **Page**

1 Application

This supplement is valid for actuators with FO connection in line/star topology.

☞ Please observe the respective operation instructions for "Electric actuators ECOTRON / PROFITRON / HiMod“ and for fieldbus interface „PROFIBUS-DP / Modbus RTU“!

2 Technical data

2.1 FO connection board

FO connection board for line and star topology	
FO cable connector type	ST = straight tip (BNC connector)
FO cable fiber type	MM = multi-mode
Fiber	Fiberglass 62.5 (50)/125 µm, multi-mode
Channels (optical)	2x RX (IN)/TX (OUT)
Data rate	Maximum 1.5 MBit/s Automatic recognition of the following baud rates: 9.6 kBit/s, 19.2 kBit/s, 45.45 kBit/s, 93.75 kBit/s, 187.5 kBit/s, 500 kBit/s, 1.5 MBit/s
Transmission type	Half-duplex
Signal delay	RS 485 <-> FO cable: < 3 T_{Bit} TX <-> RX: 11 T_{Bit}
Optical budget	13 dB
Network range max.	2,500 m (FO cable damping max. 2.0 dB/km, without additional damping)
Wave length	1310 nm
Operation temperature	-25 °C to +50 °C
Power supply	24 V DC/70 mA internally supplied via the power supply unit of the actuator.
Status indications (LEDs)	2 LEDs for general diagnostics: ● PWR = Device is ready for operation (power supply available) ● ERROR = Fault 2 LEDs for the RS 485 interface: ● RX = Byte received on RS 485 ● STATUS = Byte with incorrect bit(s) received on RS 3 LEDs for each channel: ● Link/Act = Good RX receive level. Data is received via the RS 485 channel ● Limit = Critical but still permissible receive level ● Fail = No or insufficient signal on RX
Required FO coupler for the master (DCS)	for PROFIBUS: d-Light, DL485PB-MM-ST, SIPOS order no.: 2SX7100-4LP00, or via EKS (www.eks-engel.de): EKS order no.: 01000 6221-FV for Modbus: d-Light, DL485MB-MM-ST SIPOS order no.: 2SX7100-4LM00, or via EKS (www.eks-engel.de): EKS order no.: 01000 6121-FV

2.2 Cable types for FO connection

Cables and wires according to DIN VDE 088 part 3	
Fiber	Fiberglass 62.5 (50)/125 µm, multi-mode, max. 2,500 m
Damping coefficient	Recommendation: < 2.0 dB/km
FO cable connector type	ST = straight tip (BNC connector) 

Never look directly into open cable ends or FO cable connections!

3 FO connection

3.1 Connect FO cables

The FO connection is located in the FO round plug. When removing the cover (Fig. 1, [1]), the connection board is easily accessible:

1. Loosen screws [2] and remove cover [1].
2. Loosen required sealing plugs [5].
3. Insert cable glands [4] suitable for FO cables.

☞
- Measure and record the damping of the FO cables before connection!
- Remove outer sheathing of FO cable at a length of approx. 42 cm!

4. Insert the wires into the cable glands [4].

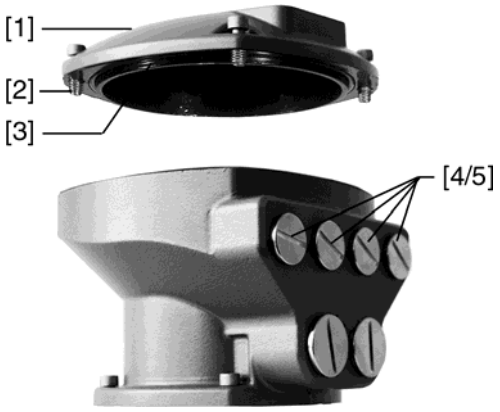

Fig. 1: FO round plug

5. Connect FO cables.

   Install cables within the terminal compartment in a loop to achieve the highest possible bending radius, see Fig. 2.

☞
- Remove dust protection only just before establishing the connection!
- Keep clean!
  Ingress of dust can render the optical components unusable.
- Observe minimum bending radius of FO cables!
- Make sure, that the bayonet connection is properly engaged!
- Protect unused FO cable connections against contamination with dust protections supplied by the factory!

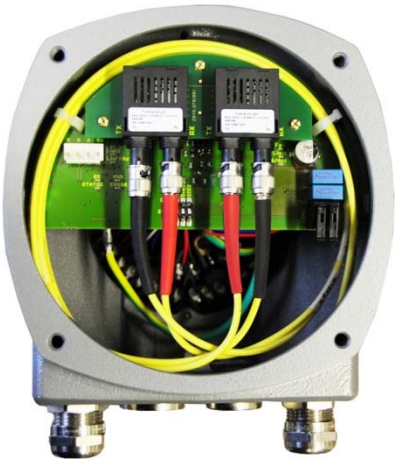

Fig. 2: Wiring within in the terminal compartment

Link ST connectors crosswise. The connection to the FO connection board (Fig. 3) is made with F-ST bayonet type connectors as follows:

- o Optical output **TX** (OUT 2) of actuator 1 ➔ Optical input **RX** (IN 1) of actuator 2
- o Optical input **RX** (IN 2) of actuator 1 ➔ Optical output **TX** (OUT 1) of actuator 2

[1] Channel 1
[2] Channel 2 (used only for line topology)
[3] Dust protection
TX Optical output (OUT)
RX Optical input (IN)

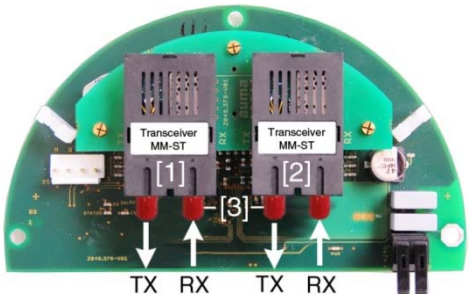

Fig. 3: FO connection board

6. Clean sealing faces of cover (Fig. 1, [1]) and housing.
7. Check whether O-ring (Fig. 1, [3]) is in good condition, correctly insert O-ring.
8. Fit cover (Fig. 1, [1]) and fasten screws (Fig. 1, [2]) evenly crosswise.
9. Tighten cable glands (Fig. 1, [4]).

3.2 Structure for line topology

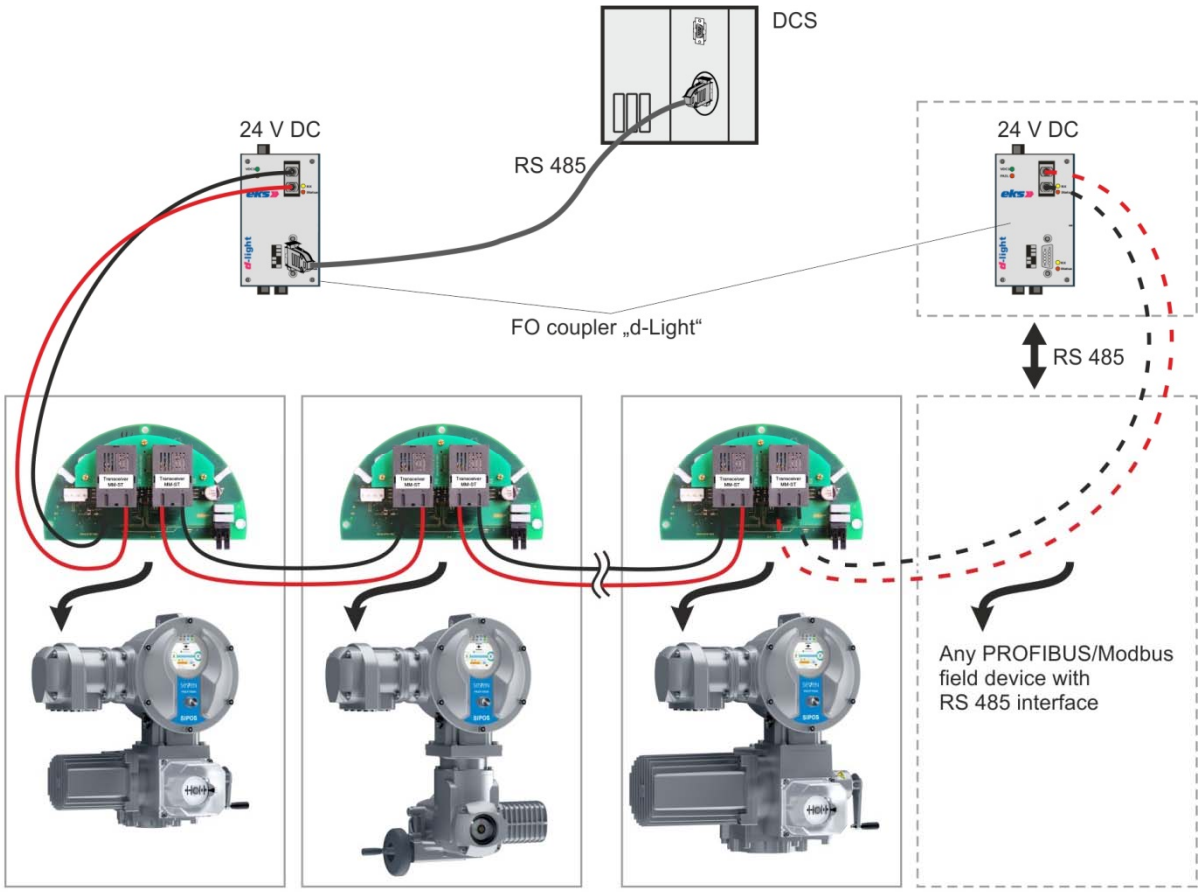

Fig.: Structure of a FO line topology with FO coupler and SEVEN actuators

For each device, the optical signal is converted into an electrical signal. When forwarded to the next device, the electrical signal is reconverted into an optical signal.
To ensure that bus communication to the following device is not interrupted should the power supply of an actuator fail, the actuator must additionally be supplied with external 24 V DC!

3.3 Structure for star topology

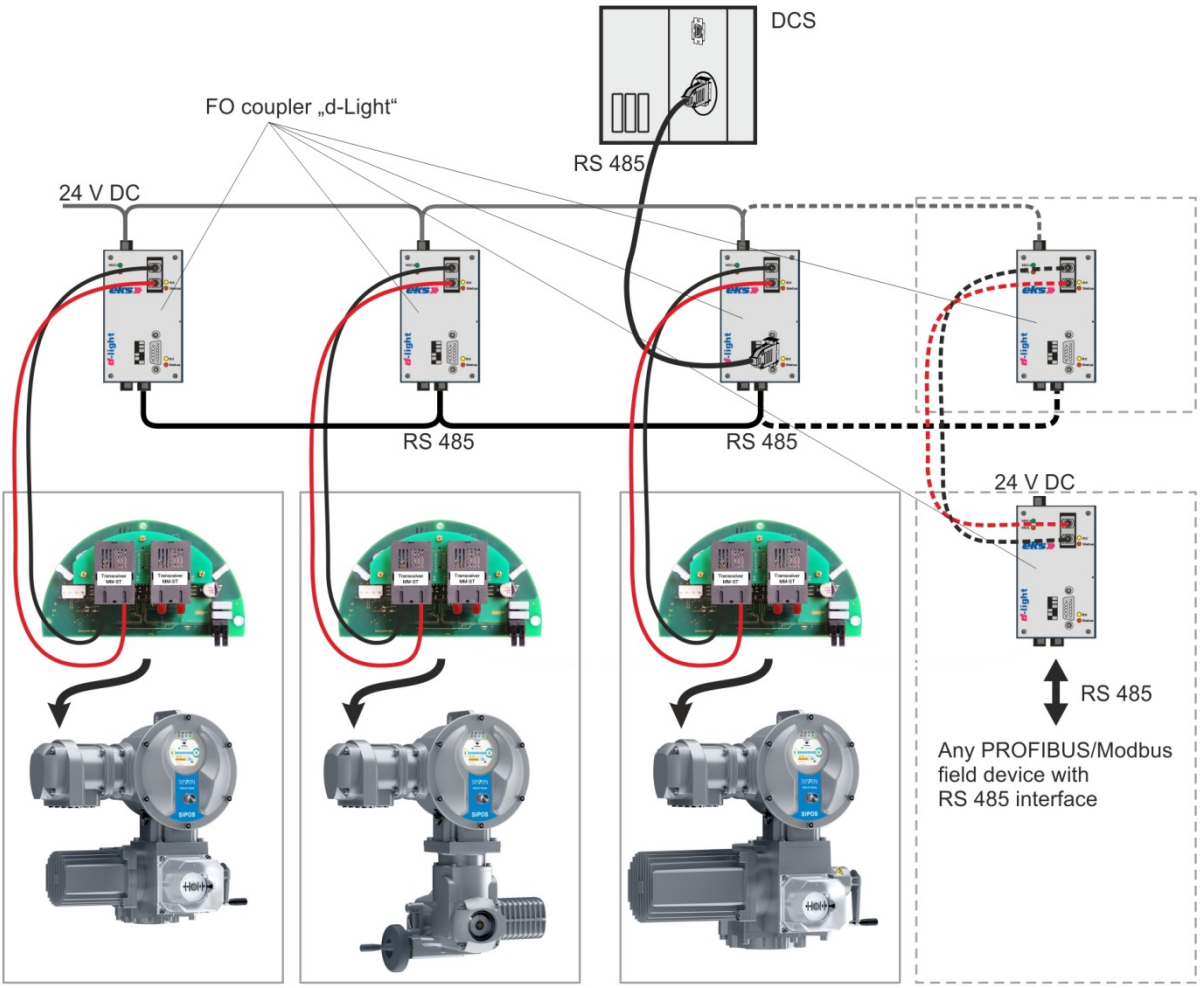

Fig.: Structure of a FO star topology with FO couplers and SEVEN actuators

☞ Failure of an FO cable section or of an actuator's FO connection board has no effect on the operability of the remaining actuators!

3.4 Electrical power supply

The electric actuator requires a mains voltage.

Should the power supply fail, the FO interface board is no longer supplied with power and the FO signal is not transmitted.

To ensure that bus communication to the actuator is not interrupted should the power supply of an actuator fail, the actuator can additionally be supplied with external 24 V DC!

☞ To ensure that all actuators are still available via FO during a power failure, all actuators have to be connected to an external 24 V DC power supply!

4 Diagnosis

The FO input signal is monitored on the FO interface board.

In the fault-free state, signals from RX (channel 1) and RX (channel 2) are received, **even if no master (DCS) is connected**.

If no signal is received at the inputs RX (channel 1) or RX (channel 2), the fault "no signal fiber optics" is set and shown on the display of the actuator. This information can be read out via fieldbus resp. is indicated by LEDs on the FO connection board.

Therefore, an open circuit can be detected and the point of interruption can be determined.

4.1 Visual indication on FO connection board

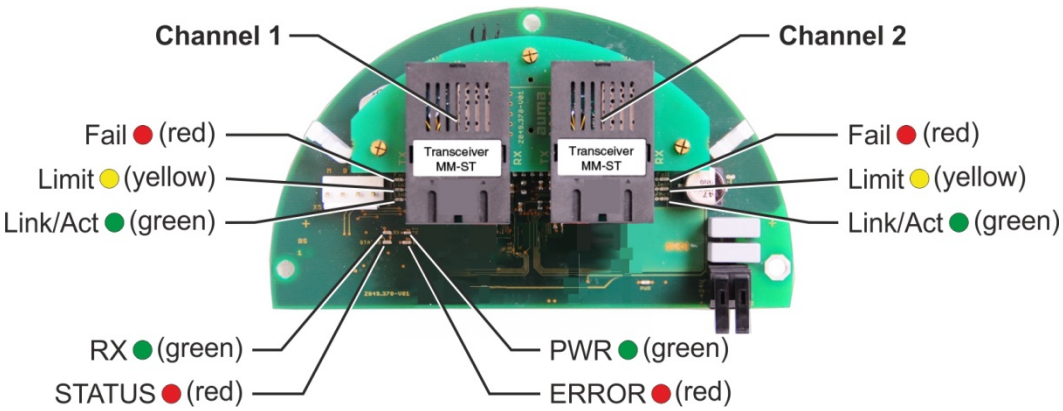

LED indications			
Designation	***Color***		***Function***
PWR	●	green	Device is ready for operation (power supply available)
ERROR	●	red	FO collective fault: Will be activated if one of the LEDs "Fail" or "Limit" is illuminated or if the internal RS 485 connection is defective.
RX	●	green	Byte received on RS 485
STATUS	●	red	Byte with incorrect bit(s) received on RS 485
each for channel 1 and channel 2:			
Link/Act	●	green	Is illuminated and LED „Limit“ is not illuminated: Good RX receive level. Is blinking: Data is being received on RX.
Limit	●	yellow	Is illuminated with LED „Link/Act“: System reserve reached (critical or permissible receive level.
Fail	●	red	Optical receiving signal incorrect (no or insufficient RX receive level).