SIPOS AKTORIK

seven

Technical Data

Electric Rotary Actuators 2SA78

HiMod

Contents

General data

SIPOS actuators are suitable for automatic and safe operation of industrial valves in accordance with DIN EN ISO 22153.

Mounting position

The actuator can be mounted in **any position**. To make local operation easier, e.g. reading information on the display, a regular mounting is recommended, i.e. the mounting flange of the valve should be positioned below the actuator. The electronics unit of the actuator can be **mounted separately** (e.g. wall bracket) using our separate mounting kit (e.g. order add-on **S41**).

Duty classifications

2SA78..-

Continuous modulating duty, class **D** according to DIN EN ISO 22153

Modulating duty, class **C** according to DIN EN ISO 22153

The actuators can be operated for all torque and speed combinations for the entire temperature range from **-20 °C to +70 °C.**

Noise level

The noise level caused by the actuator (sound pressure level at 1 m distance) is **< 70 dB (A).**

Paint finish and corrosion protection

All outside screws are exclusively made of **stainless steel**. The housing material consists of a **corrosion-resistant aluminum alloy** for normal atmospheric ambient conditions. Rotary actuators 2SA78 can be used without coating but are painted with a 2K-PUR-single layer coat (two-component polyurethane single layer coating) as standard.

The single layer coating is UV-resistant. It is applied with a minimum coating thickness of 60 µm when dry, in color similar to **RAL 7037** (silver-gray). Other RAL colors (add Y35 + number of RAL color to order) are available.

After roughening and cleaning the surfaces, the single layer coating can be painted with all common painting material. This includes epoxid lacquers, nitrocellulose lacquers etc.

Protection against corrosion from outside is stipulated in corrosivity categories in accordance with DIN EN ISO 22153 (EN ISO 12944-2):

Version	**Standard version:** Corrosivity category **C5**	Very high corrosion protection, corrosivity category **C5 with long protection time** >> superior to 300 µm conventional paint thickness <<
Installation / Environmental condition	• Industrial areas with high humidity and aggressive atmosphere. • Areas with almost permanent condensation and with high pollution.	• Coastal and offshore areas with high salinity. • Industrial areas with high humidity and aggressive atmosphere. • Areas with almost permanent condensation and with high pollution.
Order add-on	---	L38

Lubrication

The gears are filled with durable gear oil. They therefore require little maintenance. The maintenance intervals after commissioning must be observed (refer to recommendations in operating manual). The bearings of output shaft type A are lubricated with grease.

Degree of protection

The actuators meet the requirements of **IP68** protection as standard (DIN EN 60529).
They are fully screen-protected (electrical voltage and moving parts) and protected against the ingress of foreign bodies (dust), and against harmful quantities of water on continuous immersion up to max. 3 m head of water for a duration of max. 72 hours. During flooding up to 10 motor operations (switching cycles) are permitted.
IP68-8, continuous immersion up to max. 8 m head of water, on request!

Vibration performance

Electric rotary actuators 2SA7 are certified according to:

	Acceleration	Frequency range	Throughput speed	Test duration
Germanischer Lloyd	0.7 g	5 – 200 Hz	in the resonance frequencies	min. 1.5 h / in 3 directions
EN 60068-2-6	2 g	5 – 500 Hz	1 octave/min	20 sweeps (10 cycles) / in 3 directions
	Standard for 2SA781 to 2SA784			

Loads according to EN 60068-2-6 up to **2 g** for types 2SA785 and 2SA786 on request.

Loads according to EN 60068-2-6 up to **5 g** for separate mounting of electronics and gear unit on request.

The actuators can withstand a continuous load caused by plant-generated vibrations within a frequency range of 5 Hz – 200 Hz at up to **0.5 g**.

Ambient temperature

There are no functional restrictions for the temperature range of **-20 °C to +70 °C**. Lower or higher temperatures on request!

Installation altitude above sea level

The actuators are designed for an installation altitude up to 2,000 m above sea level.
Since the insulating properties of air decrease with increasing installation altitude, a voltage derating for the maximum permissible operating voltage has to be considered at installation altitudes above 2,000 m.

Installation altitude above sea level [m]	Derating factor	permissible operating voltage [V AC]
2000	1	460 + 15 % (530 + 0 %)
3000	0.88	405 + 15 % (465 + 0 %)
4000	0.77	355 + 15 % (410 + 0 %)

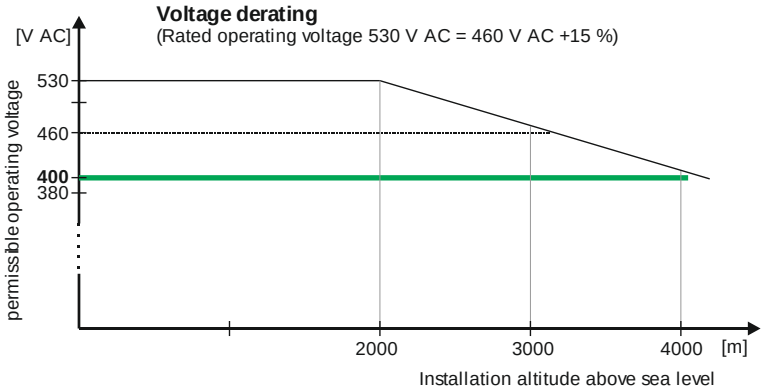

When considering a limited permissible voltage tolerance, SIPOS actuators can be safely operated at installation altitudes of up to 4,000 m with 3- phase 400 V AC (–15 %/+0 %).

Mechanical data

1 2 3 4 5 6 7 - 8 9 10 11 12 - 13 14 15 16
2SA78 [ ][ ] - [ ][ ][ ][ ][ ] - [ ][ ][ ][ ]

Tripping torque

Max. act. torque (modulating torque)	Adjustable **tripping torque T_C** [Nm]	Weight ≈ [kg]	
15	**10 – 20**	20	**1**
30	**20 – 40**	22	**2**
60	**40 – 80**	36	**3**
125	**87 – 175**	39	**4**
250	**175 – 350**	70	**5**
500	**350 – 700**	70	**6**
2000	**1400 – 2800**	137	**8**

Force for manual mode: Crank length / hand wheel dia.	at $T_{C\ max.}$
70 mm / Ø 160 mm	18 N
	36 N
90 mm / Ø 200 mm	56 N
	122N
Ø 250 mm	88 N
	175 N
	184 N

Adjustable tripping torque in steps of 10% from 50% – 100% max. torque $T_{C\ max.}$

50 % $T_{C\ max.}$ is default setting

Tripping torque range [Nm]	Tripping torque setting at .. % of $T_{C\ max.}$ **50 %**	60 %	70 %	80 %	90 %	100 %
10 - 20	**10**	12	14	16	18	20
20 - 40	**20**	24	28	32	36	40
40 - 80	**40**	48	56	64	72	80
87 - 175	**87**	105	122	140	157	175
175 - 350	**175**	210	245	280	315	350
350 - 700	**350**	420	490	560	630	700
1400 - 2800	**1400**	1680	1960	2240	2520	2800

permitted tolerance: ± 10% of $T_{C\ max.}$

Manual mode

>> Switchover only when drive is at standstill! <<

Switchover takes place by pressing in the hand wheel, motor stops operating automatically.
Electrical operation restarts automatically after releasing hand wheel.

Direction of rotation: Turning hand wheel clockwise results in clockwise rotation of output shaft (Exception: 2SA788.-).

Self-locking: The hand wheel acts directly on the motor shaft when turned by hand; the self-locking function is thus retained for self-locking actuators.

Flange size

DIN ISO 5210	DIN 3210	Flange size for tripping torque [Nm]							Spindle opening [mm]	
F07	**-**	10-20	20-40						Dimensions for A-shaft (d6), B1-shaft (d5) and C-shaft (d11) see page 7	**0**
F10	**G0**	10-20	20-40	40-80	87-122					**1**
F12	**-**			40-80	87-175					**2**
F14	**G1/2**		20-40	40-80	87-175	175-350	350-490			**3**
F16	**G3**					175-350	350-700			**4**
F25	**G4**						350-700	1400-1960		**5**
F30	**G5**							1400-2800		**6**

Dimensions to flanges and output shafts, see page 7

Output shaft design

form	DIN [1]	Output shaft			
A	ISO 5210	Output shaft with	threaded bush		**0**
	103 [2]		+ acme screw thread	Order-no. with „ **- Z** “ **+ Y18**	
B1	ISO 5210		bore with keyway		**2**
C	3338		claw coupling		**3**
B3	ISO 5210		bore with keyway		**5**
B2 / B4	ISO 5210		bore with keyway	Order-no. with **H2Y**	**9**

[1] Special output shaft and output shaft design acc. to DIN 3210 on request.

[2] Acme screw thread LH according to DIN 103, Part 2, thread nominal diameter as listed in Line 1, pitch according to preferred series. The acme screw thread must be expressly stated, e.g. Tr 16 x 4 LH DIN 103!

[3] The special bore must be stated, e.g. ø 26 with featherkey A8x7 DIN 6885!

1 2 3 4 5 6 7 - 8 9 10 11 12 13 14 15 16
2SA78 [ ][ ] - [ ][ ][ ][ ][ ] - [ ][ ][ ][ ]

Output speed

Speed range	Output speed [rpm] for tripping torque [Nm]								default setting	
1.25 – 10								1400-2800	3.5	**A**
5 – 20 [1]		10-20	20-40	40-80					14	
5 – 40		10-20	20-40	40-80	87-175	175-350	350-700			**C**
10 – 80		10-20	20-40	40-80	87-175	175-350			28	**D**

Continuous adjustable output speed within the selected speed range.

35% $n_{max.}$ is default setting

Speed range ($n_{min.}$ – $n_{max.}$)	adjustable in 2.5 % increments between 12.5 – 100 % $n_{max.}$ [rpm]							
	12.5 %			···	**35 %**	···		100 %
1.25 – 10	1.25	1.5	1.75	···	**3.5**	···	9.75	10
5 – 40	5	6	7	···	**14**	···	39	40
10 – 80	10	12	14	···	**28**	···	78	80

Speed setting

Speed is set via the hermetically sealed control button "DriveController" of the local control, via fieldbus or the PC programming software "COM SIPOS".

Different speeds can be set for OPEN, CLOSE, EMERGENCY OPEN and EMERGENCY CLOSE.

Position recording

Position recording
• niP (non-intrusive position encoder), without mechanical position indicator, • with contactless position detection (without battery), data stored in non-volatile memory, • resolution 0.0005 %, • position indication via progress bar and additional value indication [%] on the display.

2

„non-intrusive“

The non-intrusive version has no signaling gear. The exact number of rotations for the travel (max. 353.000 rev/stroke) are automatically determined and saved when approaching both end positions during end position adjustment.

[1] reduced speed range for 110 – 115 V connection voltage

Flange sizes

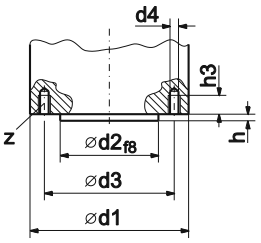

Rotary actuator type	2SA7 . □□	10 20	11 21		31 41		32 42	33 43	53 63	54 64	85		86	
Flange size as per	DIN ISO 5210	F07	F10	—	F10	—	F12	F14		F16	F25	—	F30	—
	DIN 3210	—	—	0	—	0	—	1/2		3	—	4	—	5
	d1	90	125		125		150[7]	175	175	210	300		350	
	d2	55	70	60	70	60	85	100		130	200	160	230	180
	d3	70	102		102		125	140		165	254		298	300
	d4	M8	M10		M10		M12	M16		M20	M16		M20	
	z [1]	4	4		4		4	4		4	8		8	
	h	3	3		3		3	4		5	5		5	
	h3	12	17		17		20	25		32	24		30	

Output shaft dimensions

Hollow shaft with threaded bush **form A** as per DIN ISO 5210 and **form A** as per DIN 3210	d6 max. [2]	26	32	32	48	52 [4]	55	75	77	80 [5]
	d5	32	34	42	55	55	60	80	80	92
	h	38	48	48	86	62	62	77	126	155
	l	37	47	47	85	61	61	76	126	155
	l2	175	173	228	267	243	301	316	691	782
Bore with keyway **form B1** as per DIN ISO 5210 and **form B** as per DIN 3210	d7	28	42	42	50	60		80	100	120
	d5 [3]	28	34	42	50	55	60	80	80	80
	b1	8	12	12	14	18		22	28	32
	t1	31.3	45.3	45.3	53.8	64.4		85.4	106.4	127.4
	l1	36	45	45	60	65	65	87	139	139
	h1	0	0	0	0	0		0	2	2
	l2	150	123	178	210	178	236	236	583	583
Bore with keyway **form B3** as per DIN ISO 5210 and **form E** as per DIN 3210; **form B2/B4** (dy max.)	d10	16	20	20	25	30		40	50	60
	dy max.	28	30	30	50	45	45	60	80	95
	dy max. [6]	—	50	—	—	60	—	70	100	—
	b4	5	6	6	8	8		12	14	18
	t3	18.3	22.8	22.8	28.3	33.3		43.3	53.8	64.4
	l1	36.5	44	44	60	65	65	80	139	139
	h1	0	0	0	0	0		0	2	2
Hollow shaft with claw coupling **form C** as per DIN 3338 and **form C** as per DIN 3210	d12	—	42	42	—	60		80	100	120
	d11	—	28	28	—	38		47	64	75
	b1	—	14	14	—	20		24	30	40
	h1	—	0	0	—	0		0	2	2
	h11	—	9	9	—	10		12	11	13
	l2	—	123	178	—	178	236	236	583	583
Free shaft end with featherkey **form D** as per DIN 3210	d8	—	20	20	—	30		40	50	60
	l4	—	50	50	—	70		90	110	120
	l5	—	55	55	—	76		97	117	127
	b3	—	6	6	—	8		12	14	18
	t2	—	22.5	22.5	—	33.0		43.0	53.5	64.0

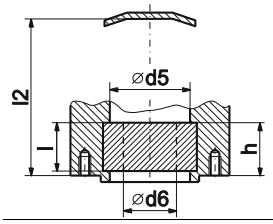

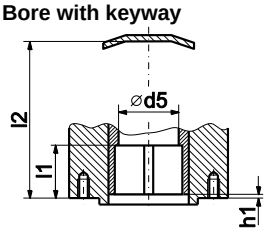

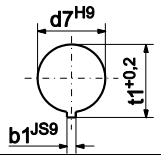

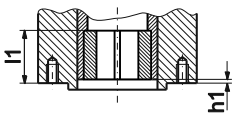

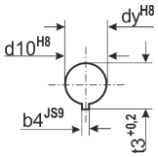

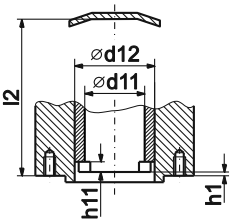

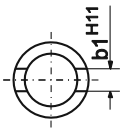

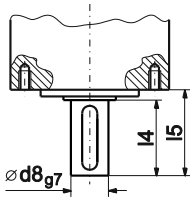

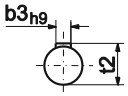

[1] number of tapped holes d4

[2] max. diameter for the spindle

[3] max. diameter for the spindle, if spindle protection tube is necessary; see dimension d6max. (form A)

[4] for version with spindle protection tube max. 50 mm

[5] max. ø77 for spindle stroke ≥ 541 mm for form A resp. ≥ 348 mm for form B1 (dimensions from connection flange)

[6] with adaptation flange (height on request)

[7] 175 mm with output shaft form A

Dimensional drawings

2SA781., 2SA782.

R867181

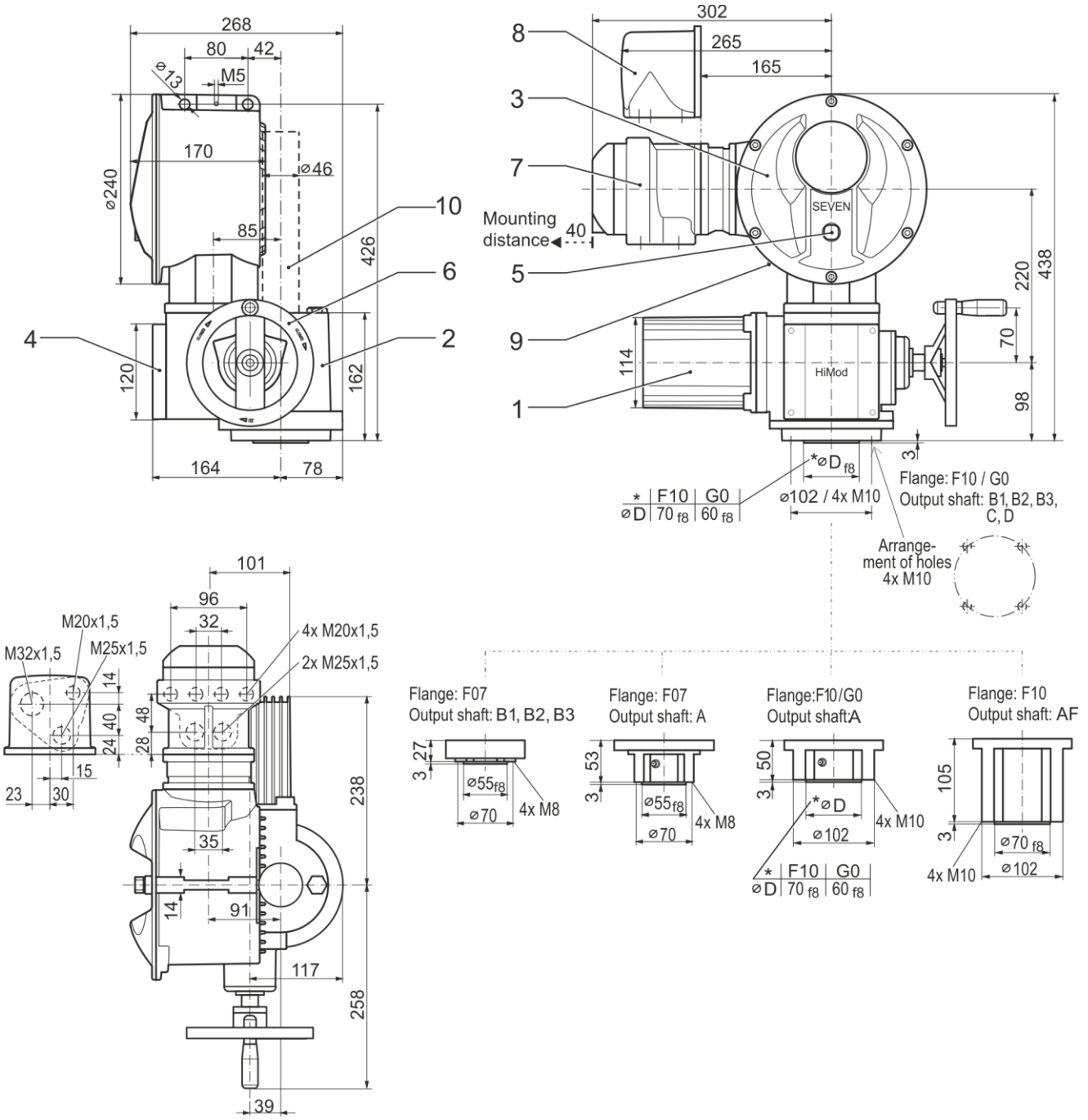

1 Motor
2 Gear unit
3 Electronics unit
4 Position recording “non-intrusive”
5 Local control station
6 Hand wheel
7 Field bus connection
8 Plug connection
9 USB interface
10 Spindle protection tube (for length, see catalog)

2SA783., 2SA784.-.C

R867182, R867183

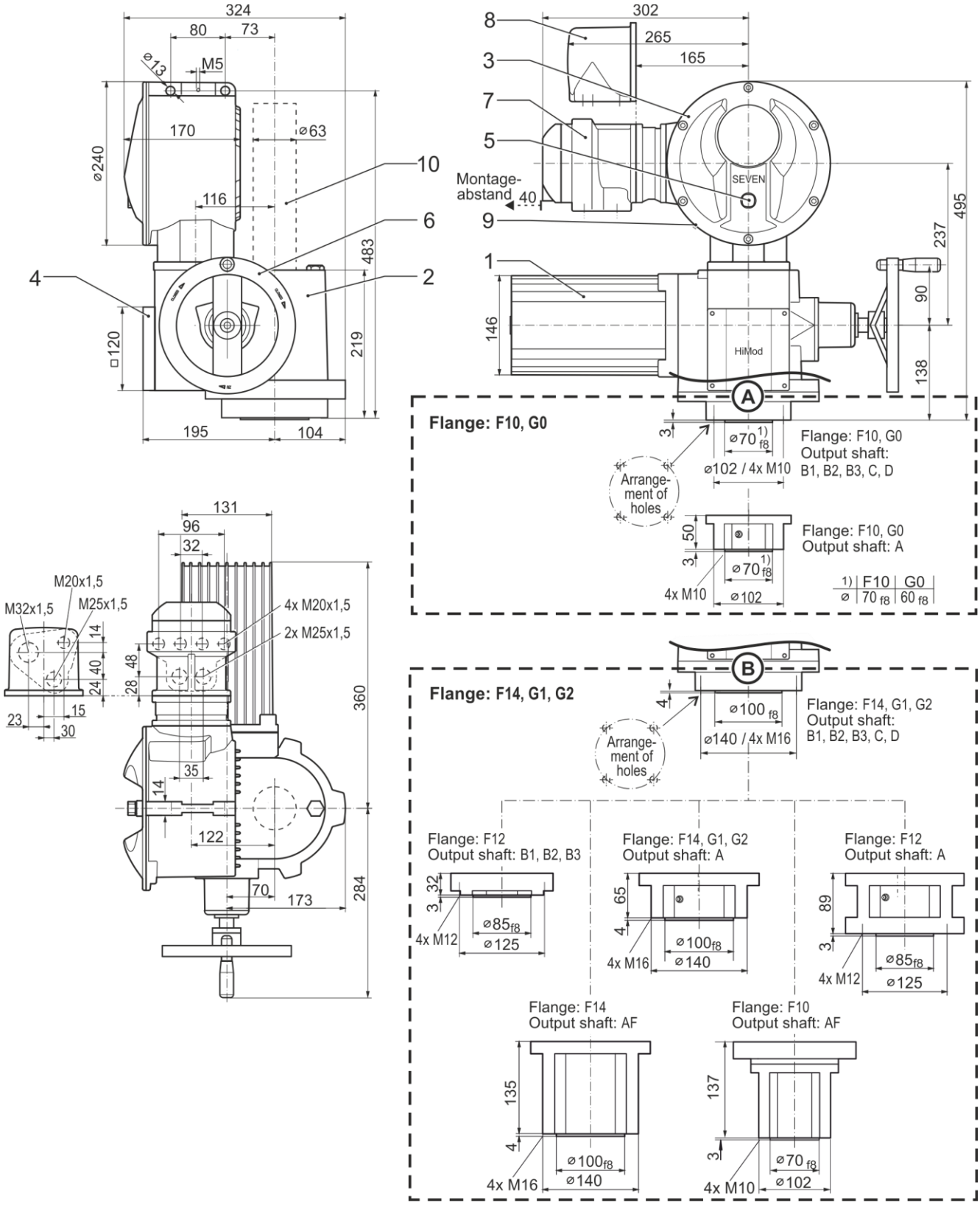

1 Motor
2 Gear unit
3 Electronics unit
4 Position recording “non-intrusive”
5 Local control station
6 Hand wheel
7 Field bus connection
8 Plug connection
9 USB interface
10 Spindle protection tube (for length, see catalog)

2SA784.-.D

R867184, R867185

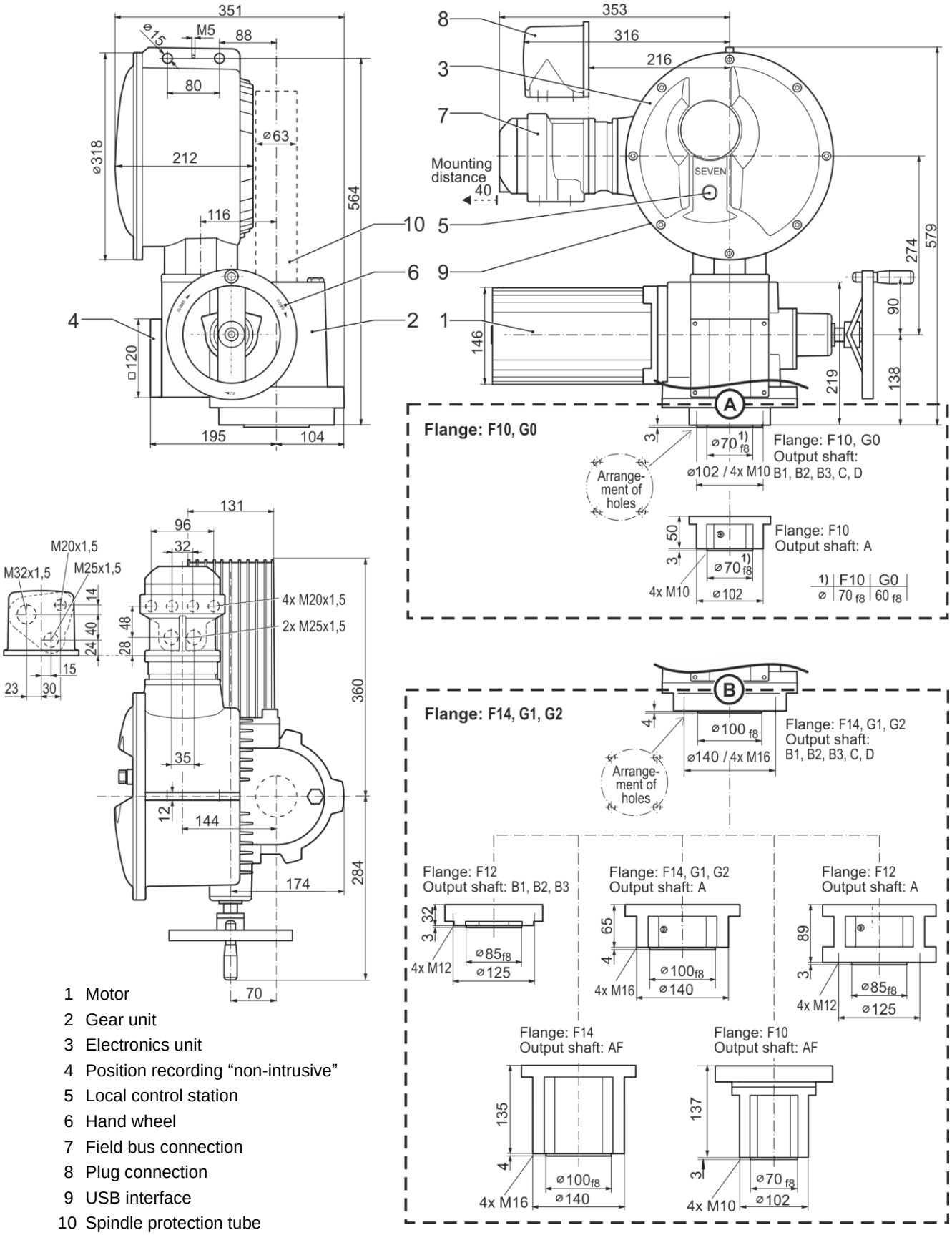

1 Motor
2 Gear unit
3 Electronics unit
4 Position recording “non-intrusive”
5 Local control station
6 Hand wheel
7 Field bus connection
8 Plug connection
9 USB interface
10 Spindle protection tube
(for length, see catalog)

2SA785., 2SA786.

R867186, R867187

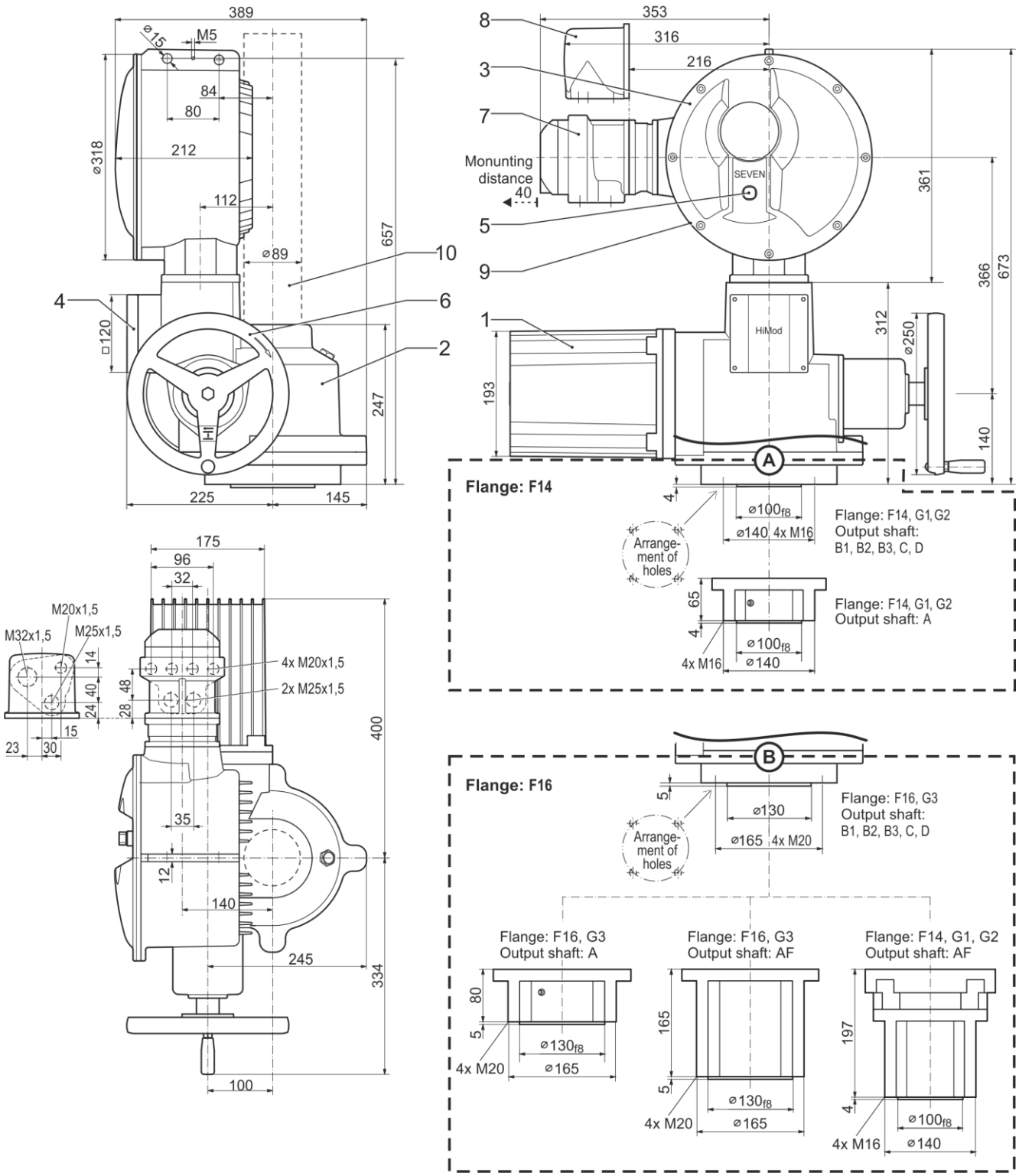

1 Motor
2 Gear unit
3 Electronics unit
4 Position recording “non-intrusive”
5 Local control station
6 Hand wheel
7 Field bus connection
8 Plug connection
9 USB interface
10 Spindle protection tube (for length, see catalog)

2SA788.

R867187 with intermediate Gear unit

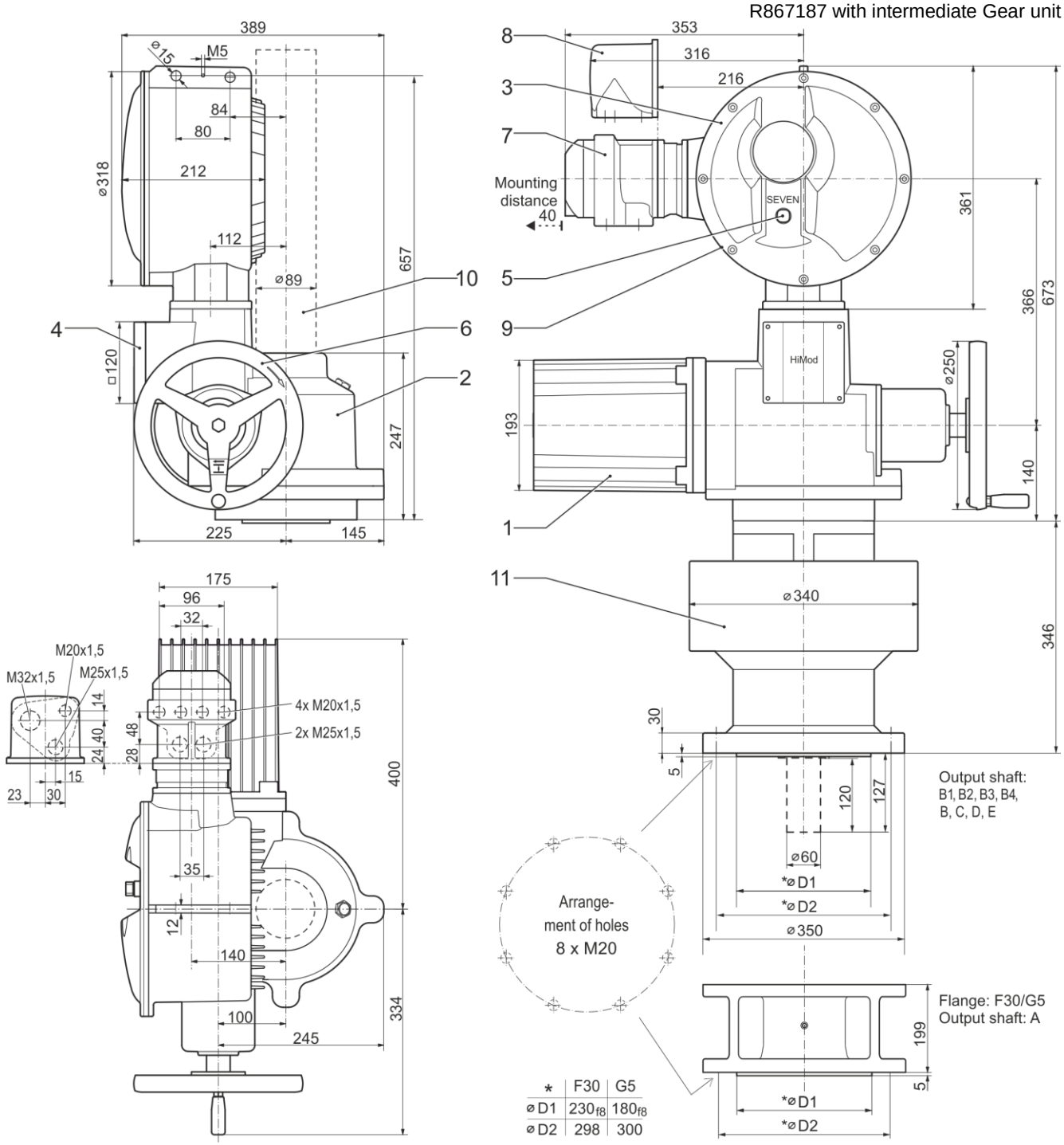

*	F30	G5
⌀D1	230_{f8}	180_{f8}
⌀D2	298	300

1 Motor
2 Gear unit
3 Electronics unit
4 Position recording “non-intrusive”
5 Local control station
6 Hand wheel
7 Field bus connection
8 Plug connection
9 USB interface
10 Spindle protection tube (for length, see catalog)
11 Intermediate gear (supplied separately)

Electrical data

Power supply

Connection voltage U_N 1-phase, 110 – 115 V AC [6] (40 – 70 Hz),
permissible voltage tolerance: -10 % / +15 %.

Type 2SA78.		$n_{max.}$ [rpm]	$T_{C\ max.}$ [Nm]	Current (110 V) [2) 3)] Nominal current I_N [4)] [A]	≈ $I_{max.}$ [5)] [A]	Power P_N [4)] [kW]	Motor power [kW]	Fuse slow blowing [A]
. . . . . 1.	-.CB	20	20	1.9	2.6	0.1	0.75	10
. . . . . 2.	-.CB		40	2.4	3.8	0.2		
. . . . . 3.	-.CB		80	4.2	8.3	0.3		

small electronics-unit

Connection voltage U_N 1-phase, 220 – 230 V AC [6] (40 – 70 Hz),
permissible voltage tolerance: -10 % (-30 % [1)]) / +15 %.

Type 2SA78..		$n_{max.}$ [rpm]	$T_{C\ max.}$ [Nm]	Current (230 V) [2) 3)] Nominal current I_N [4)] [A]	≈ $I_{max.}$ [5)] [A]	Power P_N [4)] [kW]	Motor power [kW]	Fuse slow blowing [A]
. . . . . 1.	-.CD	40	20	1.3	1.9	0.2	0.75	10
	-.DD	80		2.6	3.8	0.4		
. . . . . 2.	-.CD	40	40	1.7	2.8	0.2		
	-.DD	80		3.4	5.6	0.4		
. . . . . 3.	-.CD	40	80	3.4	6.2	0.4		

small electronics-unit

Connection voltage U_N 3-phase, 190 – 200 V AC [6] (40 – 70 Hz),
permissible voltage tolerance: -10 % (-30 % [1)]) / +15 %.

Type 2SA78..		$n_{max.}$ [rpm]	$T_{C\ max.}$ [Nm]	Current (200 V) [2) 3)] Nominal current I_N [4)] [A]	≈ $I_{max.}$ [5)] [A]	Power P_N [4)] [kW]	Motor power [kW]	Fuse slow blowing [A]
. . . . . 1.	-.CJ	40	20	0.9	1.4	0.2	0.75	6
. . . . . 2.	-.CJ		40	1.2	2.0	0.2		
. . . . . 3.	-.CJ		80	2.5	4.5	0.4		

small electronics-unit
einheit

Connection voltage U_N 3-phase, 380 – 460 V AC [6] (40 – 70 Hz),
permissible voltage tolerance: -10 % (-30 % [1)]) / +15 %.

Type 2SA78..		$n_{max.}$ [rpm]	$T_{C\ max.}$ [Nm]	Current (400 V) [2) 3)] Nominal current I_N [4)] [A]	≈ $I_{max.}$ [5)] [A]	Power P_N [4)] [kW]	Motor power [kW]	Fuse slow blowing [A]
. . . . . 1.	-.CE	40	20	0.5	0.7	0.2	0.75	6
	-.DE	80		1.0	1.4	0.4		
. . . . . 2.	-.CE	40	40	0.9	1.7	0.2		
	-.DE	80		1.8	3.4	0.4		
. . . . . 3.	-.CE	40	80	1.2	1.8	0.5		
	-.DE	80		2.4	3.6	1.0	1.50	
. . . . . 4.	-.CE	40	175	1.6	3.0	0.7		10
	-.DE	80		3.2	6.0	1.4	3.00	
. . . . . 5.	-.CE	40	350	3.0	5.0	1.3		
	-.DE	80		6.0	10.0	2.6	5.50	16
. . . . . 6.	-.CE	40	700	5.1	9.5	2.3		
. . . . . 8.	-.AE	10	2800	5.1	9.5	2.3	5.50	16

small electronics-unit

big electronics-unit

[1)] Full torque for voltage fluctuations between –30 % and +15 %
(in case of undervoltage from U_N –30 % to –10 %, operation may be performed at reduced output speed n).

[2)] Lower voltage increases the current, higher voltage reduces the current.

[3)] Starting current $I_A \leq$ nominal current I_N.

[4)] At 35 % of the maximum torque $T_{C\ max.}$

[5)] Maximum current $I_{max.}$ is present for torque-dependent cut-off mode and for a running torque of 70 % the maximum torque $T_{C\ max.}$

[6)] Overvoltage category: Category III according to IEC 60364-4-443

Motor operation

The frequency converter generates a frequency/amplitude adjustable 3-phase AC voltage for the motor from the single or 3-phase main voltage supply. Motor speed and thus actuator output speed are internally adjusted via the frequency.

Motor protection

The motor has a thermistor-type motor protection against thermal damage. The winding temperature is monitored continuously by the microcontroller. The response after exceeding the permitted winding temperature is programmable.

Motor space heater

The microcontroller continuously monitors the current winding temperature by means of a temperature sensor integrated in the motor winding. When the motor space heater is activated by the program, the motor winding is heated by a DC voltage via the frequency converter depending on the cooling characteristic of the motor winding when the motor is switched off.

Control and feedback signals

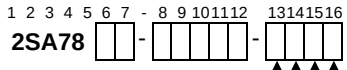

4	5 binary inputs 24/48 V DC (OPEN, CLOSE, STOP, EMERGENCY, Mode), 8 binary outputs 24/48 V DC, 1 analog output 0/4 – 20 mA (actual position value), 1 analog input 0/4 – 20 mA (position setpoint), multicolor graphic display with status indication
A	electronics unit without hardware extension
B	relay board with 8 outputs
C	PROFIBUS DP 1 channel - with V1 and V2 services
D	PROFIBUS DP 2 channel - with V1 and V2 services
E	MODBUS RTU 1 channel
F	MODBUS RTU 2 channel
J	HART
K	HART + relay board
M	MODBUS TCP/IP 1 channel
O	prepared for
Q	remote control unit RCU + MODBUS RTU 1 channel
R	PROFINET incl. acyclic services
S	PROFINET with system redundancy S2 and acyclic services
B	positioner (standard)
C	process controller
E	positioner + travel dependent output speed adjustment
G	positioner + external analog output speed setpoint
H	positioner with split-range functionality
K	positioner + travel dependent freely adjustable positioning times
L	process controller + travel dependent freely adjustable positioning times
4	round plug

Signal assignment for the binary outputs

for HiMod (also refer to wiring diagrams, signals 1 - 8):

Output	default setting		with option „Y12“		with option „Y15“		with option „Y90“	
1	End position OPEN	NO	Intermediate contact OP	NO	Intermediate contact OP	NO	Intermediate contact OP	NO
2	End position CLOSED	NO	Intermediate contact CL	NO	Intermediate contact CL	NO	Intermediate contact CL	NO
3	Torque OPEN reached	NC	Ready+Remote	NO	Torque OPEN reached	NO	Torque OPEN reached	NO
4	Torque CLOSE reached	NC	Torque OPEN reached	NC	Torque CLOSE reached	NO	Torque CLOSE reached	NO
5	Fault	NC	Torque CLOSE reached	NC	Ready+Remote	NO	Local	NC
6	Local	NO	Local	NO	Local	NO	Fault	NC
7	Blinker	NO	Warning motor temp.	NO	Blinker	NO	*Not used*	
8	Warning motor temp.	NC	Fault external voltage	NC	Warning motor temp.	NO	*Not used*	

NO = active high, NC = active low

Optional free assignment of outputs, NO/NC optional (can be changed locally)
End position CLOSED
End position OPEN
Torque CLOSE reached
Torque OPEN reached
Torque CL/OP reached
Fault
Blinker
Ready
Ready+Remote
Local
Intermediate contact CL
Intermediate contact OP
Fault motor temperature
Warning motor temp.
Fault external voltage
Maintenance
Run indication CLOSE
Run indication OPEN
Run indication OPEN/CLOSE
Blinker+ End position CLOSED
Blinker+ End position OPEN
Travel end CLOSE
Travel end OPEN

Connections at round plug (plug assignment)

Inputs and outputs		HiMod
Binary	Inputs	2, 3, 4, 5, 9, 10 and 27
	Outputs	16 [1], 17, 19, 20, 21, 22, 23, 24, 25 and 26
Analog	Inputs	11 and 12, 13 and 14 (option)
	Outputs	7 and 8, 48, 49 and 50 (option)
Relay outputs (option)		28, 29, 30, 31, 32, 33, 34, 35, 36, 37, 40, 41, 42, 43, 44, 45, 46 and 47
Relay outputs (option + C54)		28, 29, 30, 31, 32, 33, 34, 35, 37, 40, 41, 42, 43, 44, 45, 46, 47, 48, 49 and 50
PROFIBUS/ MODBUS (option)	1 channel	28, 29, 30 and 31
	2 channel	28, 29, 30, 31, 32, 33, 34 and 35
PROFIBUS/ MODBUS (option + C55)	1 channel	19, 20, 21 and 22
	2 channel	19, 20, 21, 22, 23, 24, 25 and 26
PROFINET (option)		13, 14, 48 and 50
Voltage output „P24 int.“ resp. „P24 gal.“		1, 6, 15 [1] and 18 [1]
Auxiliary 24 VDC supply for electronics unit „P24 ext.“		38 and 39

XK

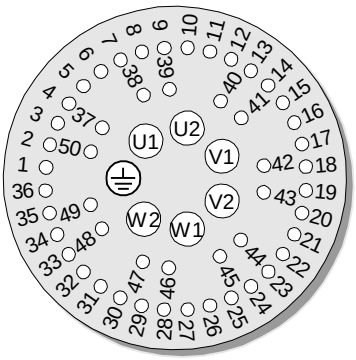

Plug assignment for the external round plug connection

Position recording

Position recording is performed via a non-intrusive position encoder (niP) with microcontroller evaluation.

The travel recording (max. 353,000 revolutions/stroke) of this magnetic position encoder is contactless and stored safe from power failure; it is therefore also functioning in manual operation during power failure (without battery).

Accuracy at e.g. 36 revs/stroke: 0.002 %, with a resolution of 0.0005 %.

Positioner

Defining an analog position setpoint (0/4 – 20 mA) for the positioner results in precise control of the position corresponding to this value.

The **positioner** works adaptively. This leads to a continuous automatic adaptation of the threshold value to the controlled system:

- Hysteresis — 0.4 % of the travel.
- Response threshold (dead band) — adjustable, default setting: 0.2 to 2.5 % of the travel.
- Upward adaptation — response threshold is enlarged by 0.1 %, if an OPEN ==> CLOSE ==> OPEN command sequence occurs within 6 seconds.
- Downward adaptation — response threshold is reduced by 0.01 %, when no control has taken place within 10.8 seconds.

[1] Not applicable for version with relay board.

Power and consumption values

Binary inputs and outputs

Binary inputs - Control inputs OPEN, CLOSED, STOP, Emergency and Mode.
Binary outputs - 8 binary electronic outputs for signals.

All binary inputs and outputs are galvanically isolated and potential-free.
Binary outputs are resistant to both short-circuits and overloads.

			Input		Output	
			24 V DC	48 VDC	24 V DC	48 VDC
Level	L - potential (low -)	[V DC]	0 – 4	0 – 4	0 – 2.5	0 – 2.5
	H - potential (high -)	[V DC]	16 – 30	16 – 60	18 – 30	18 – 60
Current (per input or output)		[mA]	4 – 7	7 – 15	max. 100	max. 50
Resistance		[Ω]	4000	4000	max. 10	max. 10

Analog inputs and outputs

Analog inputs - AE1: 0/4 – 20 mA,
- AE2: 0/4 – 20 mA (add-on PCB).

Analog outputs - AA1: Position actual value (0/4 – 20 mA) active, i.e. with internal power supply 24 V DC,
- AA2: Position actual value (0/4 – 20 mA) passive, i.e. with external power supply 24 V DC (add-on PCB).

Analog inputs and outputs are galvanically isolated.
AE2 and AA2 are located on a common add-on PCB and have the same potential. For existing add-on PCB (AE2+AA2), assignment of AE1 and AE2 analog inputs as well as AA1 and AA2 analog outputs is freely programmable.
Analog outputs are resistant to both short-circuits and overloads.

		Input	Output
Current	[mA]	0 – 20 (max. 24)	0 – 20 (max. 21)
Resistance / load	[Ω]	45	max. 600

Ranges 0 – 20 mA or 4 – 20 mA with rising or falling level can be adjusted.

Relay outputs

Relay outputs are galvanically isolated.

	DC for resistive load			AC
max. switching capacity	180 W (for 30 V)			1500 VA
max. switching voltage	30 V	50 V	300 V	250 V
max. switching current	6 A	0.6 A	0.15 A	6 A

The relay board has 8 relay outputs (5 NO, 1 NC and 2 change-over contacts).

Internal 24 V power supply

Binary inputs and outputs are galvanically isolated from the electronics in case of internal 24 V DC power supply via „P24 gal.“.

External 24 V power supply

During power failure, both actual position value and device state are still sent via the external 24 V DC supply „P24 ext.” to the binary signal outputs (signals 1 – 8) and communication via COM-SIPOS or fieldbus is available.
During mains operation, own supply via actuator.

External 24 V power supply	Input P24 ext.	Current consumption	
		min. 20 V (21 V with relay board)	typ. 24 V
Σ current standard version	[mA]	165	150
		additional load:	
with PROFIBUS DP / Modbus RTU, 1 channel	[mA]	+20	+20
with PROFIBUS DP / Modbus RTU, 2 channel	[mA]	+40	+40
with PROFINET (1 Port / 2 Port)	[mA]	+70 / +120	+70 / +120
with Modbus TCP/IP	[mA]	+50	+50
with HART	[mA]	+18	+21
with relay board	[mA]	+50	+60
with actual position value	[mA]	+20	+20
with Bluetooth	[mA]	+10	+10

Wiring diagrams

HiMod

Y070.251

Connection control and feedback signals

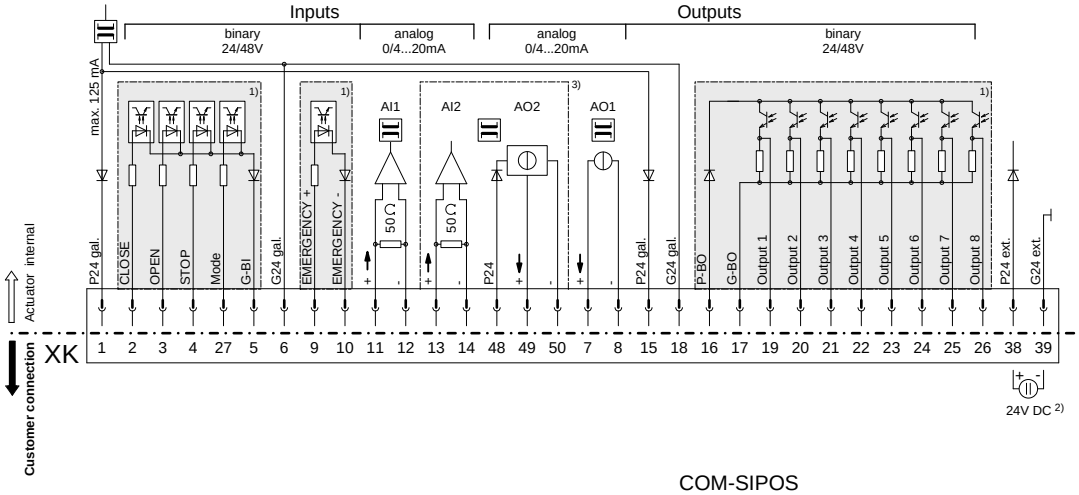

COM-SIPOS

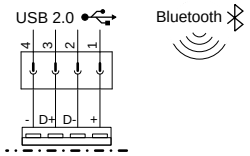

Connection power supply

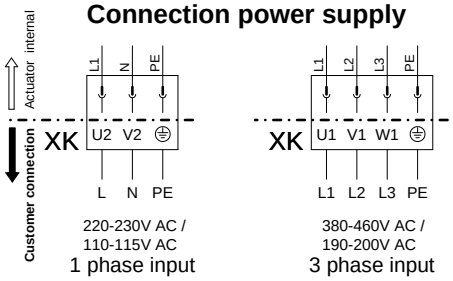

Customer connection - wiring examples:

Wiring example I : **„internal 24V DC supply"**
(here all inputs and outputs are supplied internally from the electronics unit with 24V DC)

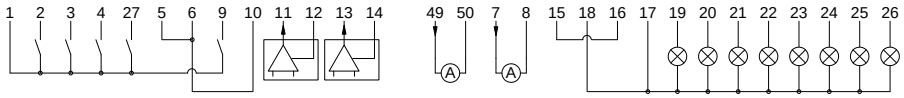

Wiring example I I : **„external 24/48V DC supplies"**
(in this example all galvanically isolated areas are supplied externally from different 24/48V DC power sources)

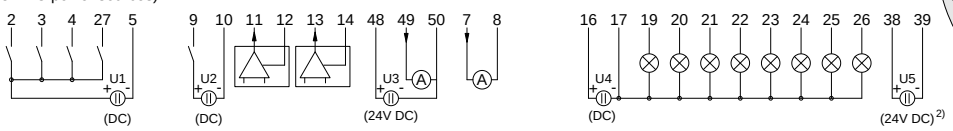

Plug assignment **XK**

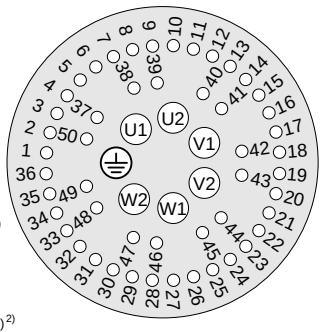

1) galvanically isolated areas: can be supplied from different sources with 24/48V DC

2) auxiliary 24V DC supply for electronics unit (if required)
(In case of mains failure both actual position value and actuator status (binary outputs 1-8) will continued to be signalled.
Communication via COM-SIPOS – changes of parameters resp. download of actuator data – is possible.)

3) option

Wire cross-section max.:
- 6 mm² Power supply
- 2,5 mm² Control and feedback signals.

The control/feedback wire **must** be shielded.

HiMod with relay board

Y070.252

Connection control and feedback signals

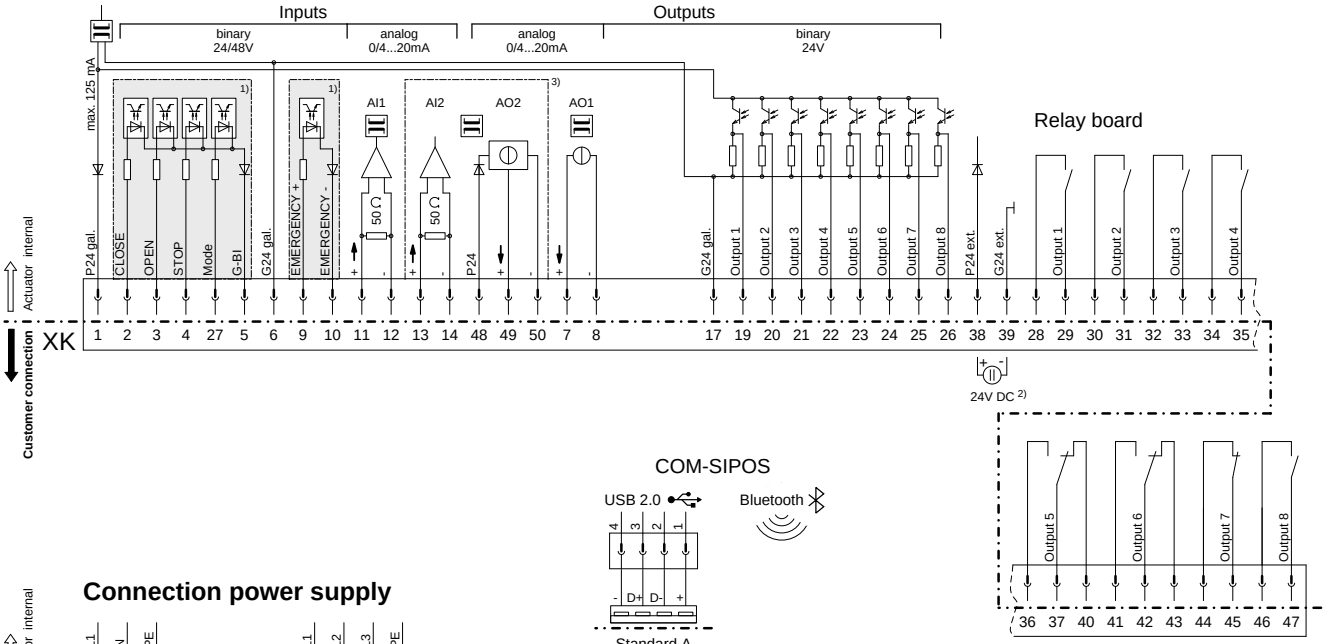

COM-SIPOS

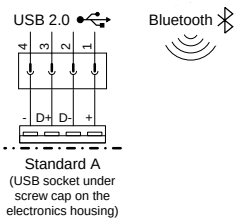

Connection power supply

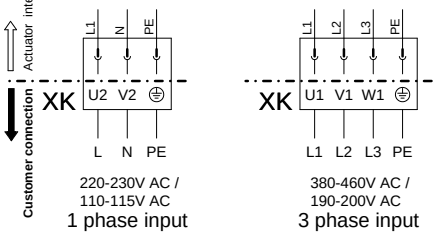

Customer connection - wiring examples:

Wiring example I : **„internal 24V DC supply“**
(here all inputs and outputs are supplied internally from the electronics unit with 24V DC)

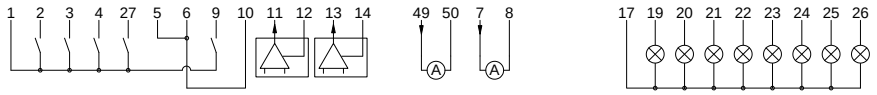

Wiring example I I : **„external 24/48V DC supplies“**
(in this example all galvanically isolated areas are supplied externally from different 24/48V DC power sources)

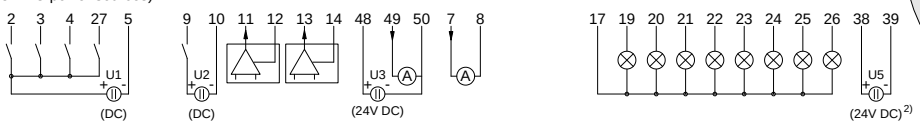

Plug assignment **XK**

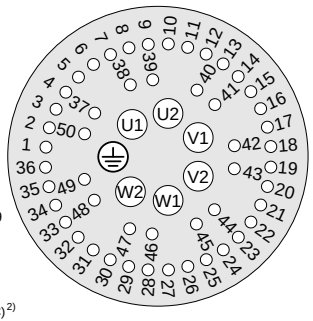

1) galvanically isolated areas: can be supplied from different sources with 24/48V DC

2) auxiliary 24V DC supply for electronics unit (if required)
(In case of mains failure both actual position value and actuator status (binary outputs 1-8) will continued to be signalled.
Communication via COM-SIPOS – changes of parameters resp. download of actuator data – is possible.)

3) option

Wire cross-section max.:
- 6 mm^2 Power supply
- 2.5 mm^2 Control and feedback signals

The control/feedback wire **must** be shielded!

HiMod with Fieldbus

Y070.253

Connection control and feedback signals

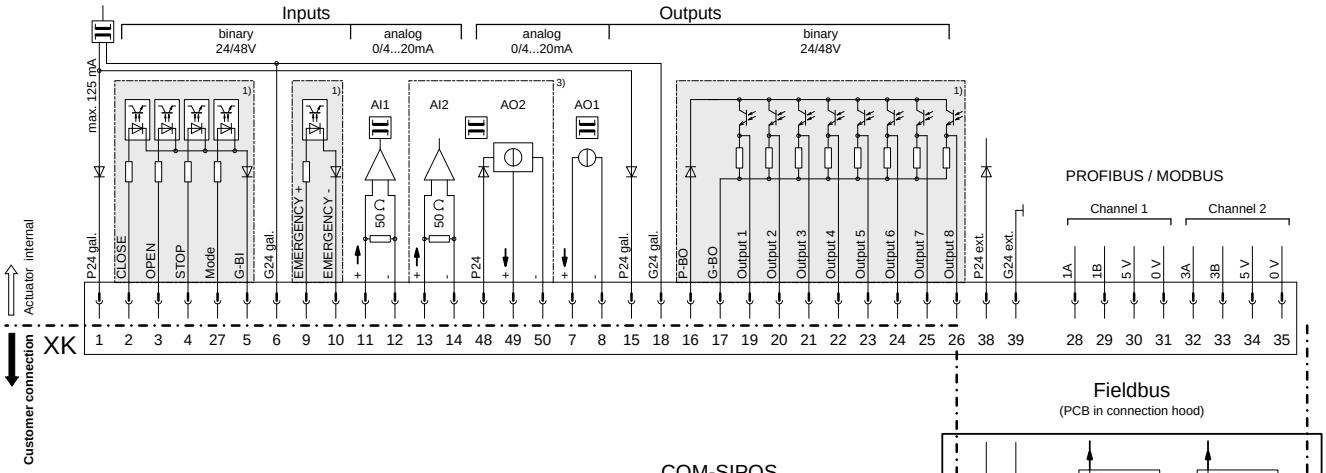

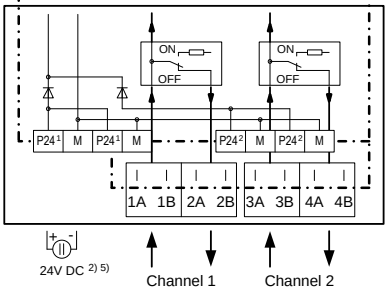

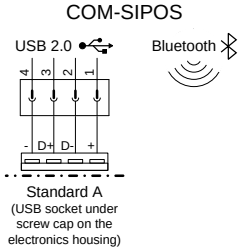

Connection power supply

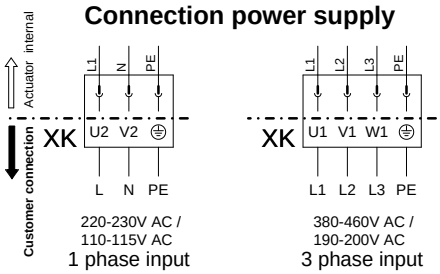

Customer connection - wiring examples:

Wiring example I : „**internal 24V DC supply**“
(here all inputs and outputs are supplied internally from the electronics unit with 24V DC)

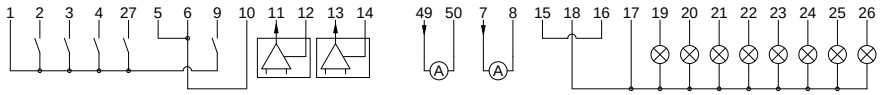

Wiring example I I : „**external 24/48V DC supplies**“
(in this example all galvanically isolated areas are supplied externally from different 24/48V DC power sources)

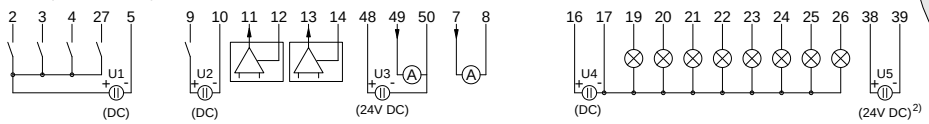

Plug assignment **XK**

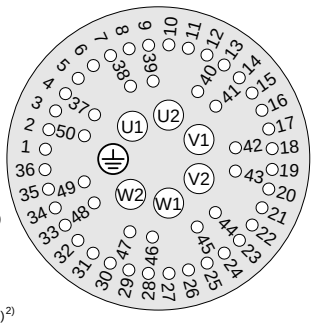

1) galvanically isolated areas: can be supplied from different sources with 24/48V DC

2) auxiliary 24V DC supply for electronics unit (if required)
(In case of mains failure both actual position value and actuator status (binary outputs 1-8) will continued to be signalled.
Communication via COM-SIPOS or fieldbus – changes of parameters resp. download of actuator data – is possible.)

3) option

5) up to 4 connectors P24 and M on the fieldbus connection PCB

Wire cross-section max.:
- 6 mm^2 Power supply
- 2.5 mm^2 Control and feedback signals

The control/feedback wire **must** be shielded!

HiMod with Fieldbus and FO

Y070.362

Connection control and feedback signals

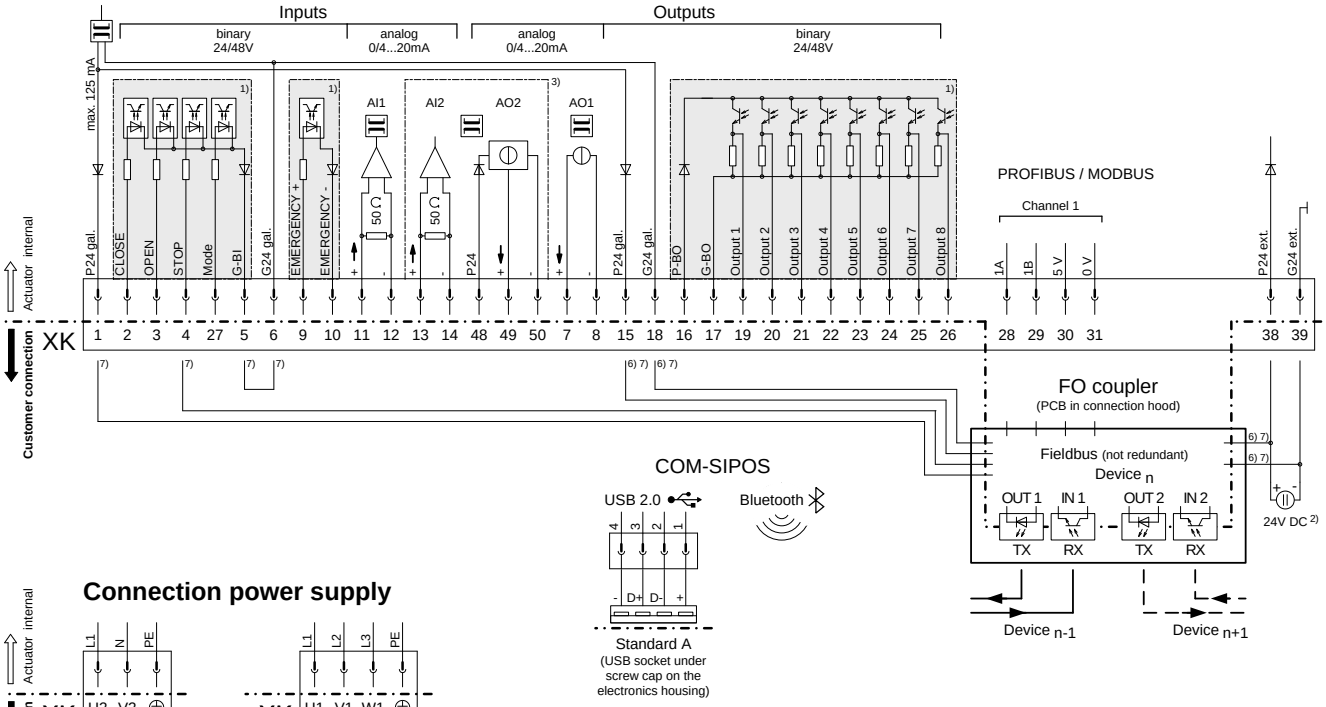

Connection power supply

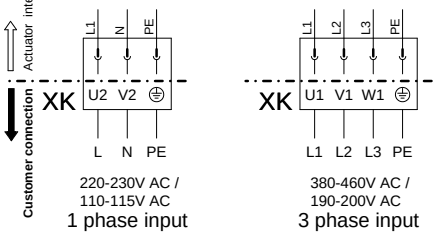

Customer connection - wiring examples:

Wiring example I : **„internal 24V DC supply“**
(here all inputs and outputs are supplied internally from the electronics unit with 24V DC)

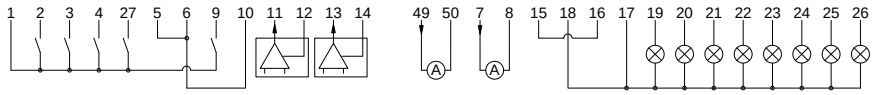

Wiring examplel I I : **„external 24/48V DC supplies“**
(in this example all galvanically isolated areas are supplied externally from different 24/48V DC power sources)

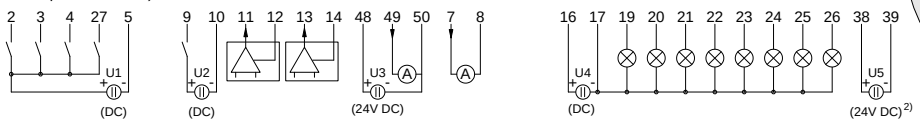

Plug assignment **XK**

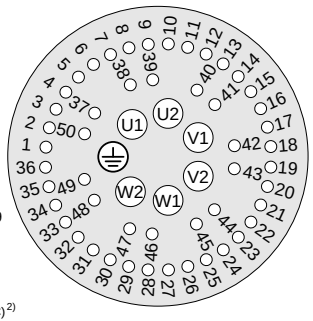

1) galvanically isolated areas: can be supplied from different sources with 24/48V DC

2) auxiliary 24V DC supply for electronics unit (if required)
(In case of mains failure both actual position value and actuator status (binary outputs 1-8) will continued to be signalled.
Communication via COM-SIPOS or fieldbus – changes of parameters resp. download of actuator data – is possible.)

3) option

6) factory-wired connection cable only with option „C17" (FO in linear or star topology)

7) factory-wired connection cable only with option „C18" (PROFIBUS, FO in ring topology)

Wire cross-section max.:
- 6 mm² Power supply
- 2.5 mm² Control and feedback signals

The control/feedback wire **must** be shielded!

HiMod with Fieldbus and relay board

Y070.471

Connection control and feedback signals

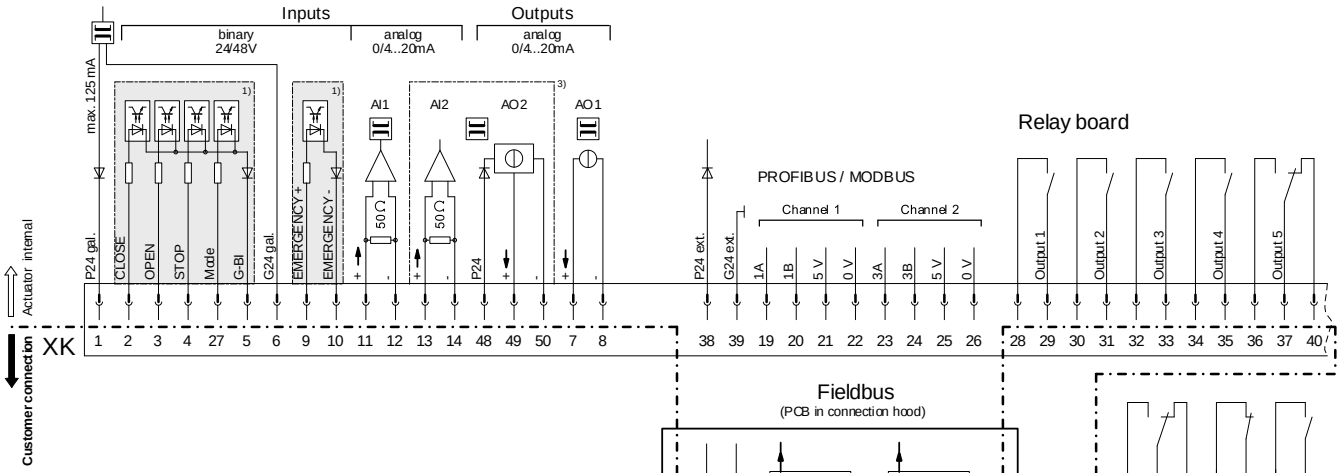

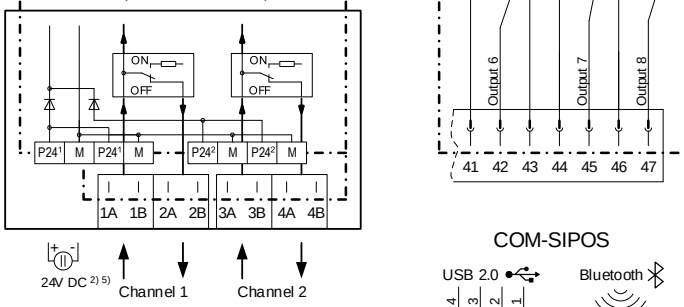

Connection power supply

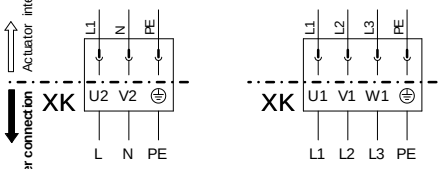

220-230V AC / 110-115V AC
1 phase input

380-460V AC / 190-200V AC
3 phase input

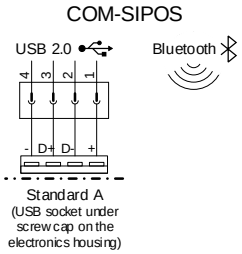

Customer connection - wiring examples:

Wiring example I: **„internal 24V DC supply"**
(here all inputs and outputs are supplied internally from the electronics unit with 24V DC)

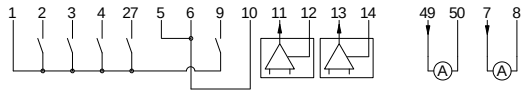

Wiring example II: **„external 24/48V DC supplies"**
(in this example all galvanically isolated areas are supplied externally from different 24/48V DC power sources)

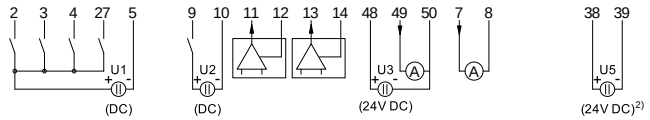

Plug assignment **XK**

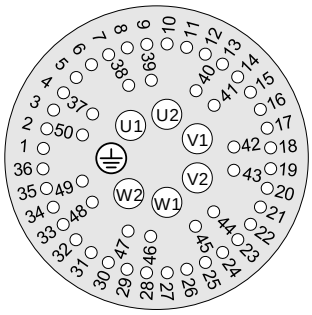

1) galvanically isolated areas: can be supplied from different sources with 24/48V DC

2) auxiliary 24V DC supply for electronics unit (if required)
(In case of mains failure both actual position value and actuator status (binary outputs 1-8) will continued to be signalled. Communication via COM-SIPOS or fieldbus – changes of parameters resp. download of actuator data – is possible.)

3) option

5) up to 4 connectors P24 and M on the fieldbus connection PCB

Wire cross-section max.:
- 6 mm² Power supply
- 2.5 mm² Control and feedback signals

The control/feedback wire **must** be shielded!

HiMod with PROFINET

Y070.531

Connection control and feedback signals

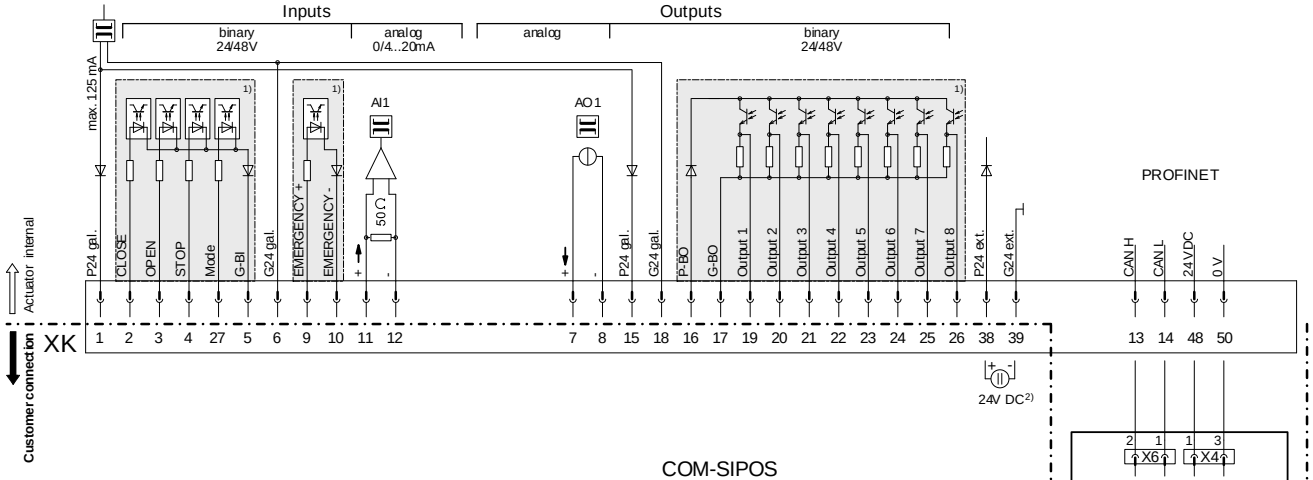

Connection power supply

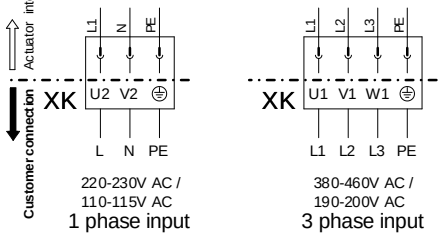

COM-SIPOS

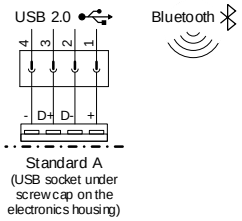

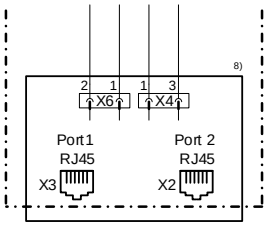

Customer connection - wiring examples:

Wiring example I: **„internal 24V DC supply"**
(here all inputs and outputs are supplied internally from the electronics unit with 24V DC)

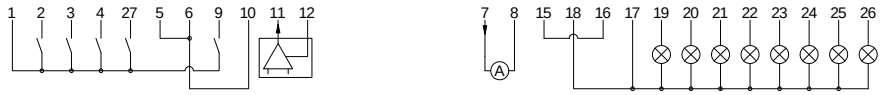

Wiring example II: **„external 24/48V DC supplies"**
(in this example all galvanically isolated areas are supplied externally from different 24/48V DC power sources)

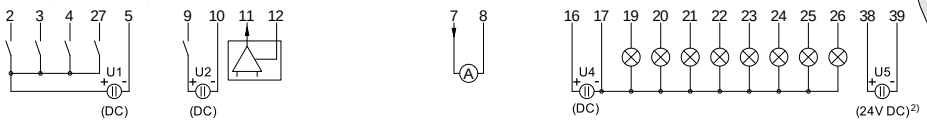

Plug assignment **XK**

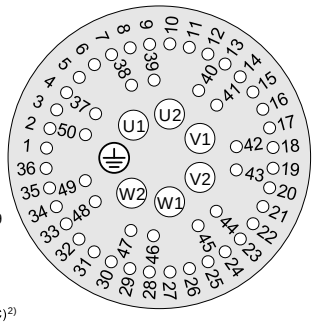

1) galvanically isolated areas: can be supplied from different sources with 24/48V DC

2) auxiliary 24V DC supply for electronics unit (if required)
(In case of mains failure both actual position value and actuator status (binary outputs 1-8) will continued to be signalled.
Communication via COM-SIPOS or fieldbus – changes of parameters resp. download of actuator data – is possible.)

8) option C13 - PROFINET connection with RJ45 (X2, X3) instead of Insulation displacement connection (X5, X6)

Wire cross-section max.:
- 6 mm^2 Power supply
- 2.5 mm^2 Control and feedback signals

The control/feedback wire **must** be shielded!

HiMod with PROFINET and relay board

Y070.532

Connection control and feedback signals

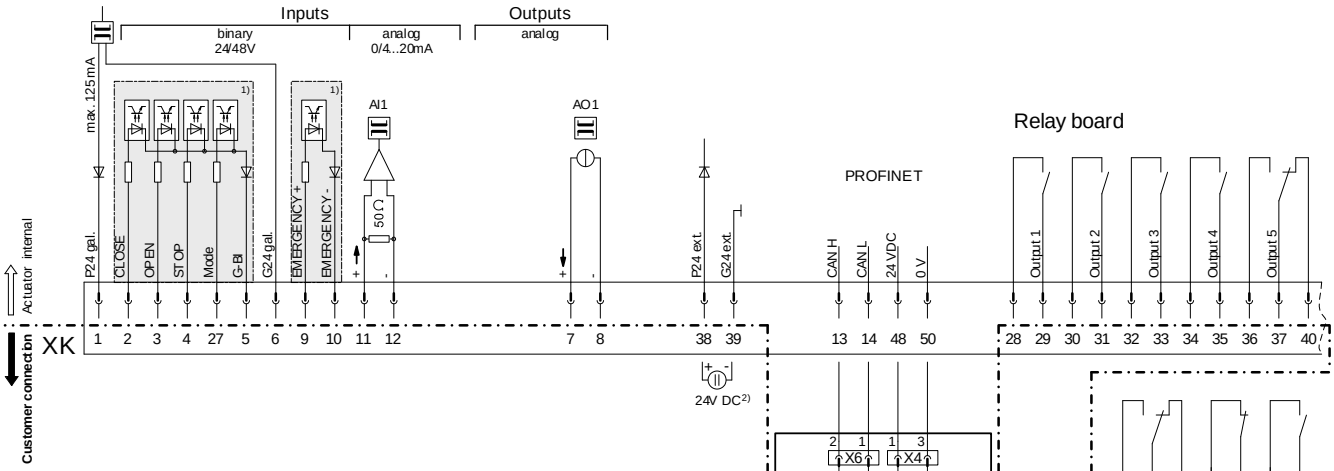

Connection power supply

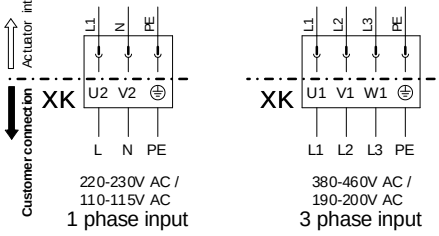

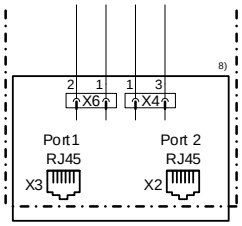

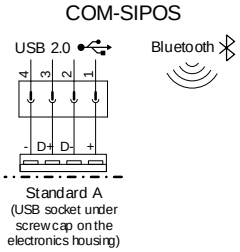

Customer connection - wiring examples:

Wiring example I: „**internal 24V DC supply**"
(here all inputs and outputs are supplied internally from the electronics unit with 24V DC)

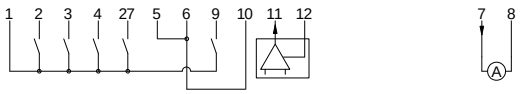

Wiring example II: „**external 24/48V DC supplies**"
(in this example all galvanically isolated areas are supplied externally from different 24/48V DC power sources)

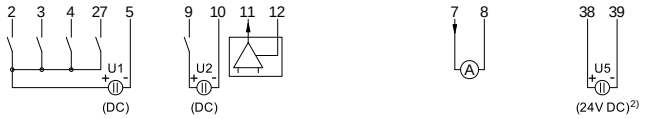

Plug assignment **XK**

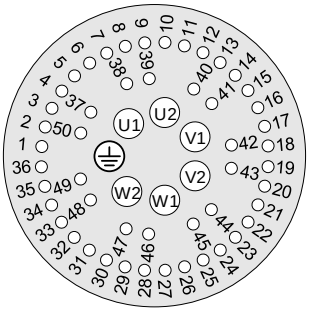

1) galvanically isolated areas: can be supplied from different sources with 24/48V DC

2) auxiliary 24V DC supply for electronics unit (if required)
(In case of mains failure both actual position value and actuator status (binary outputs 1-8) will continued to be signalled.
Communication via COM-SIPOS or fieldbus – changes of parameters resp. download of actuator data – is possible.)

8) option C13 - PROFINET connection with RJ45 (X2, X3) instead of Insulation displacement connection (X5, X6)

Wire cross-section max.:
- 6 mm^2 Power supply
- 2.5 mm^2 Control and feedback signals

The control/feedback wire **must** be shielded!

HiMod with SIPOS 5 compatible relay board “C54“

Y070.535

Connection control and feedback signals

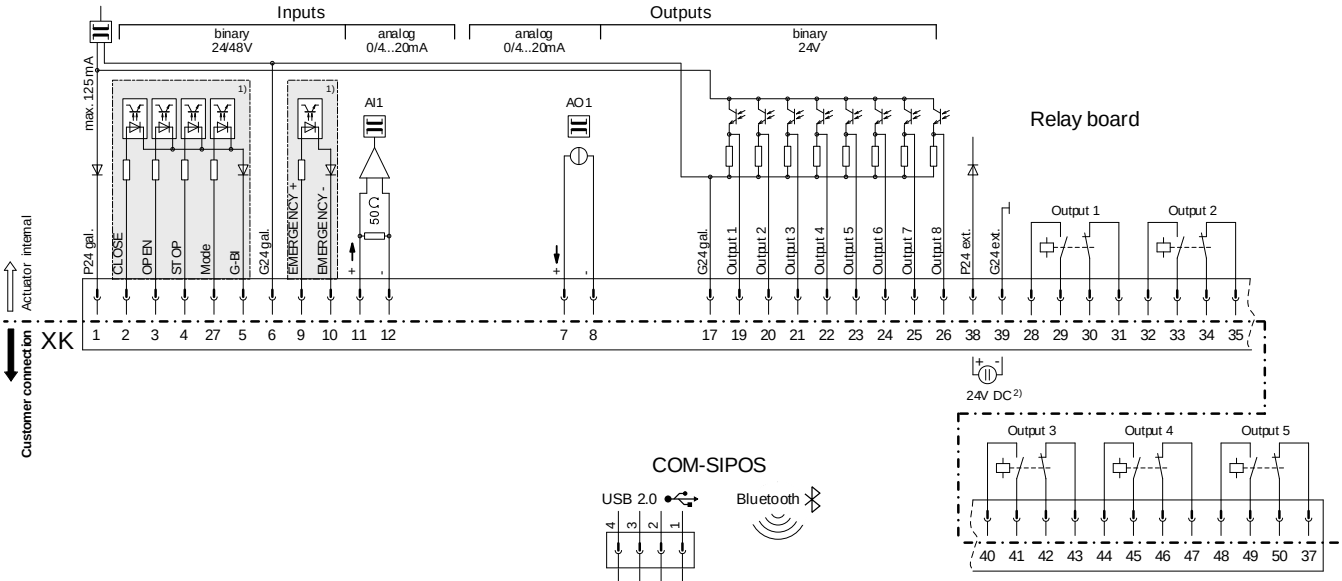

COM-SIPOS

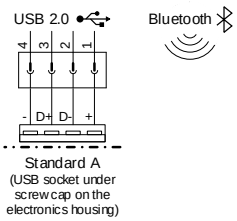

Connection power supply

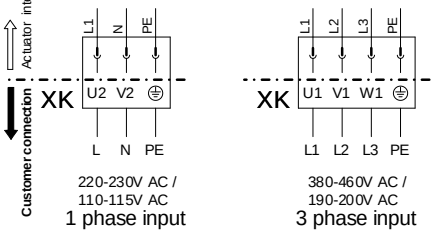

Customer connection - wiring examples:

Plug assignment **XK**

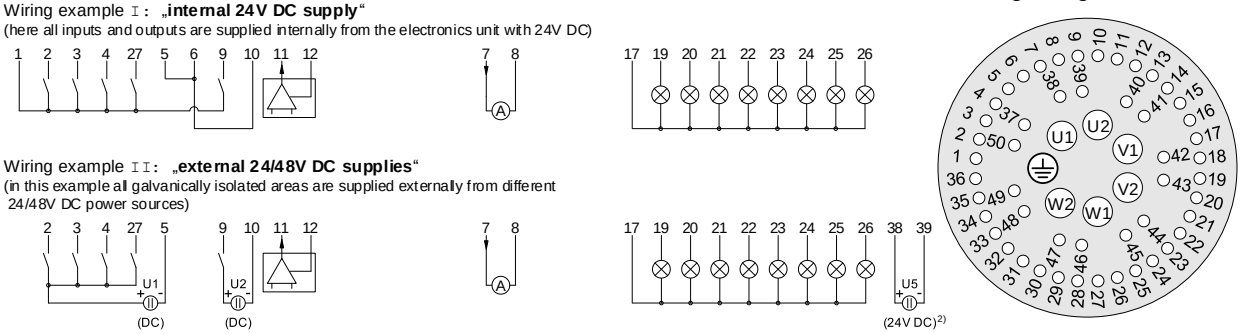

1) galvanically isolated areas: can be supplied from different sources with 24/48V DC

2) auxiliary 24V DC supply for electronics unit (if required)
(In case of mains failure both actual position value and actuator status (binary outputs 1-8) will continued to be signalled.
Communication via COM-SIPOS – changes of parameters resp. download of actuator data – is possible.)

Wire cross-section max.:
- 6 mm² Power supply
- 2.5 mm² Control and feedback signals

The control/feedback wire **must** be shielded!

Im Erlet 2 • D-90518 Altdorf
www.sipos.de