Additional dimensional drawing **Separate mounting** R866883

Valid for:	Dimensional drawing ECOTRON / PROFITRON	Dimensional drawing HiMod
2SA704.-.D, 2SA704.-.E, 2SA734.-.D, 2SA734.-.E, 2SA754.-.D, 2SA784.-.D	R866853	R866863

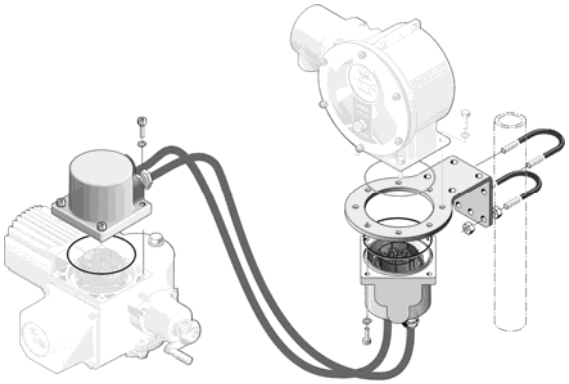

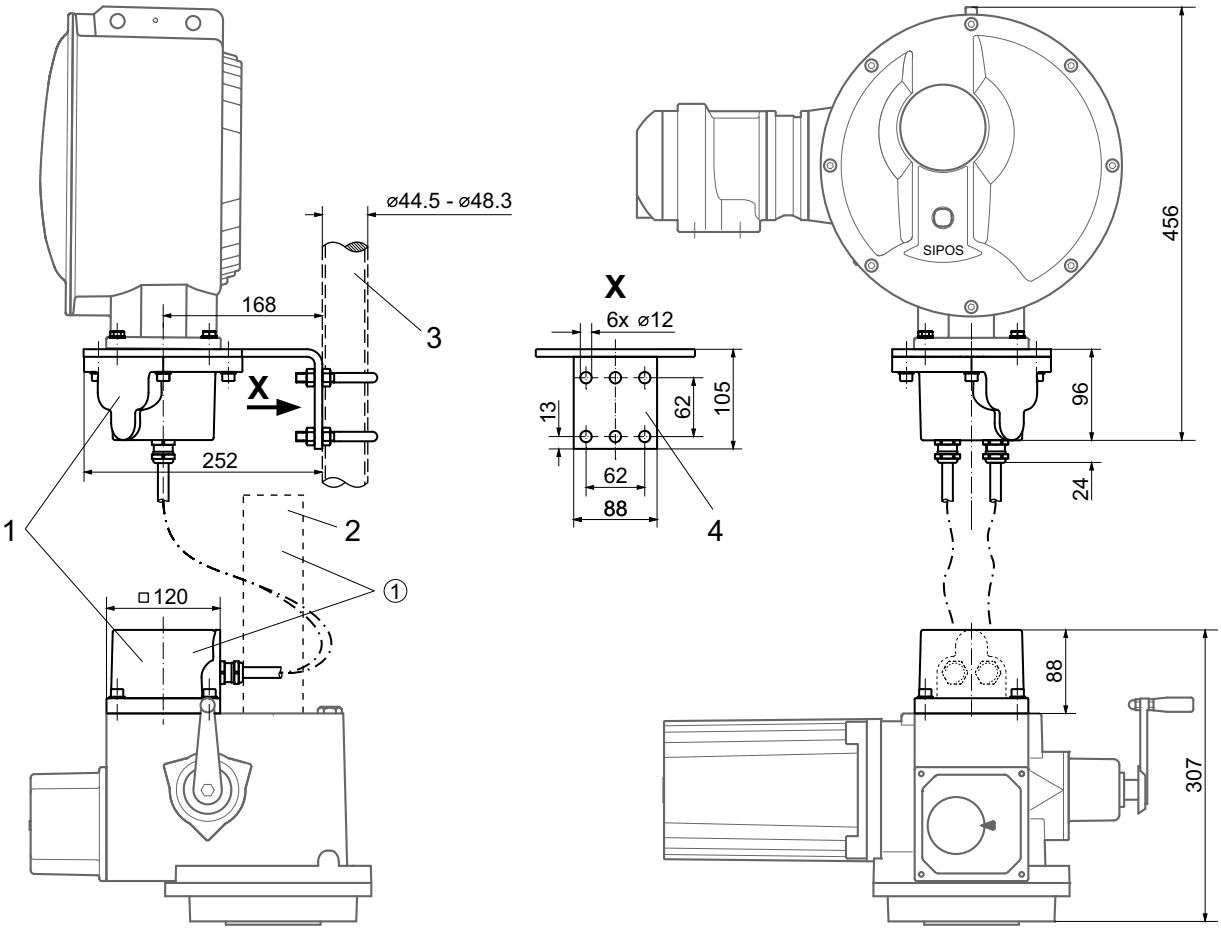

Missing dimensions refer to dimensional drawing

① For version with spindle protection tube, the plug element integrated into the connector hood has to be lifted by loosening the 4 fixing screws and inserted again shifted by 90° or 180°. The cable glands then point in direction of the motor or the position indicator.
Caution: Connecting cables must not touch the motor as the motor might become very hot at full load!

1 Connector hoods for separate mounting
2 Spindle protection tube (option)
3 Pipe mounting
4 Wall mounting

© SIPOS Aktorik GmbH
Im Erlet 2 • D-90518 Altdorf
www.sipos.de