Damper rod and Ball joints

The damper rod consists of two ball-and-socket joints screwed or welded onto the linking bar (e.g. threaded pipe according to DIN 2441) and a lever with four taper holes.

During assembly the lever is cut to the required length and is then welded onto the shaft of the butterfly valve or onto a clamp fixed on the shaft.

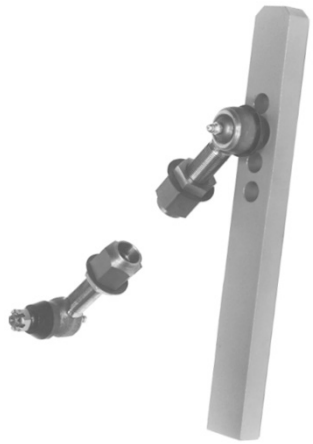

☞ The linking bar is not supplied. It can be made of steel pipe, e.g. according to DIN 2441, and cut to the required length!

Order No.

2SX7304- 0 K G 0 ☐ Damper rod

	Max. force transmissible by the damper rod (kN)	Weight (kg)	Type-assignment: Gear box GS	Type-assignment: Part-turn actuator	List price [...]
0	7.5	3.5	50.3	2SG7..8, 2SQ7..8	
1	12.5	8	60.3, 80.3	---	
2	21	19	100.3, 125.3	---	

2SX7304- 0 G E 0 ☐ Ball joints (2 pieces)

	Max. force transmissible (kN)	Weight (kg)	Type-assignment: Gear box GS	Type-assignment: Part-turn actuator	List price [...]
0	7.5	1.5	50.3	2SG7..8, 2SQ7..8	
1	12.5	2	60.3, 80.3	---	
2	21	3	100.3, 125.3	---	

Technical data

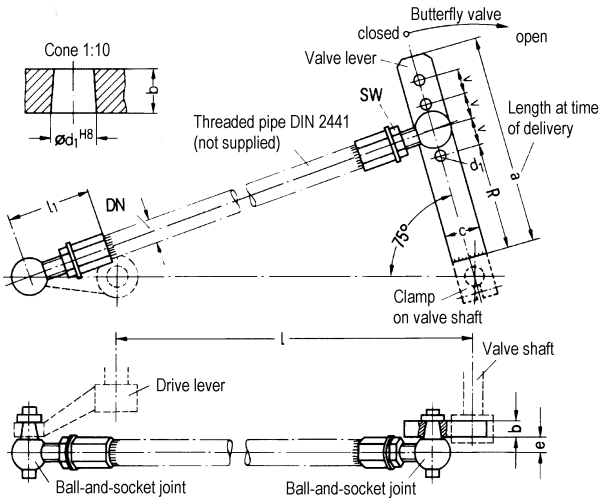

2SX7304-	a	b	c	DN	d_1	e	l_{min}	l_{max}	l_{1min}	l_{1max}	R	v	SW
0KG00	330	20	40	25	16	23	400	2400	67	97	187,5	22,5	30
0GE00	---		---								---	---	
0KG01	420	25	60	32	22	28	800	3300	73	112	250	30	41
0GE01	---		---								---	---	
0KG02	600	30	100	50	26	33	1200	4750	85	122	375	45	46
0GE02	---		---								---	---	

Im Erlet 2 • D-90518 Altdorf
www.sipos.de